Vol.05

INTELLIGENT SYSTEMS

iBASE

www.ibase.com.tw

Table of Contents

Table of Contents	**2-3**
About IBASE	**4-5**
IBASE IIoT Solutions	**6-7**
Vertical Applications	**8-10**
Comparison Table	**11-19**

AGS Series

AGS100 AGS100T	Ultra-Compact IoT Gateway Fanless System with Intel® Atom® x7/x5, Pentium® & Celeron® Processors	20-21
NEW AGS101T	Ultra-Compact IoT Gateway Fanless System with Intel® Atom® x6212RE/ x6414RE Processors	22-23
AGS102 AGS102T	Ultra-Compact IoT Gateway Fanless System with Intel® Atom® x7/x5, Pentium® & Celeron® Processors	24-25
AGS103T	Ultra-Compact IoT Gateway Fanless System with Intel® Atom® x6413E/x6211E Processors	26-27

AMS Series

AMS210	Automatic Control System with 9th/8th Gen Intel® Core™ Processor Supports 4th LAN Port, 3x Display Ports	28-29
AMS300	Expandable Fanless & Compact System with 7th/6th Gen Intel® Core™ i7/i5/i3 Desktop Processors Supports 1x Mini PCI-E (full-size)	30-31
AMS300-1	Expandable Fanless & Compact System with 7th/6th Gen Intel® Core™ i7/i5/i3 Desktop Processors Supports 3rd LAN Port	32-33
AMS301	Expandable Fanless & Compact System with 7th/6th Gen Intel® Core™ i7/i5/i3 Desktop Processors Supports 4x Mini PCI-E (full-size)	34-35
AMS302	Expandable Fanless & Compact System with 7th/6th Gen Intel® Core™ i7/i5/i3 Desktop Processors Supports 1x Mini PCI-E (full-size), 1x PCI-E (x8) & 1x PCI-E (x4)	36-37
AMS310	Expandable Fanless & Compact System with 10th Gen Intel® Core™ i7/i5/i3 Desktop Processors Supports 3x M.2(B/E/M-Key), 1x PCI-E (x8) & 1x PCI-E (x4)	38
NEW AMS312	Expandable Fanless & Compact System with 10th Gen Intel® Core™ i7/i5/i3 Desktop Processors Supports 2x M.2(B/E-Key), 1x PCI-E (x8) & 1x PCI-E (x4)	39
NEW AMS322	Expandable Fanless & Compact System with 11th Gen Intel® Core™ i7/i5/i3 Desktop Processors Supports 2x M.2(B/E/M-Key), 1x PCI-E (x16) & 1x PCI-E (x4)	40

AMI Series

AMI220	Compact Expandable Fanless System with 7th/6th Gen Intel® Core™ i7/i5/i3 Desktop Processors Supports 1x HDD/SSD Trays	41
AMI221	Compact Expandable Fanless System with 7th/6th Gen Intel® Core™ i7/i5/i3 Desktop Processors Supports 1x PCI-E/PCI & 2x HDD/SSD Trays	42-43
AMI222	Compact Expandable Fanless System with 7th/6th Gen Intel® Core™ i7/i5/i3 Desktop Processors Supports 2x PCI-E/PCI & 2x HDD/SSD Tray & 2x Fieldbus	44-45
AMI230	Compact Expandable Fanless System with 9th/8th Gen Intel® Core™ i7/i5/i3 Desktop Processors Supports 4x Intel® Gigabit LAN, 8x USB 3.0, 3x M.2	46-47
AMI231	Compact Expandable Fanless System with 9th/8th Gen Intel® Core™ i7/i5/i3 Desktop Processors Supports 1x PCI-E/PCI & 2x HDD/SSD Trays	48-49
AMI232	Compact Expandable Fanless System with 9th/8th Gen Intel® Core™ i7/i5/i3 Desktop Processors Supports 2x PCI-E/PCI & 2x HDD/SSD Trays	50-51
NEW AMI240	Compact Expandable Fanless System with 13th Gen Intel® Core™ i7/i5/i3 Desktop Processors Supports 4x Intel® Gigabit LAN, 8x USB 3.0, 3x M.2	52-53

CMI Series

CMI Series Chassis & Motherboard		54
Comparison of CMI Series		55
CMI202-991	Expandable System with IBASE MI991AF Mini-ITX Motherboard Industrial 250W DC-Input Switching Power Supply	56
CMI221-991	Expandable System with IBASE MI991AF Mini-ITX Motherboard Industrial 250W ATX Power Supply	57
CMI211 System Family	Expandable System with IBASE Mini-ITX Motherboard 10th Gen Intel® Core™ Processor, industrial 250W ATX Power Supply	58-59
CMI212 System Family	Expandable System with IBASE Mini-ITX Motherboard 10th Gen Intel® Core™ Processor, optional 330W Power Adaptor	60-61
CMI222 System Family	Expandable System with IBASE Mini-ITX Motherboard Optional 84W Power Adaptor	62-63
CMI300-988	Fanless system with IBASE MI988F Mini-ITX Motherboard AMD Ryzen™ V1000 on board	64-65

ASB Series

ASB200-915	Fanless System with IBASE IB915 3.5" Single Board Computer 6th Gen Intel® Core™ U-series Processor	66
ASB200-916	Fanless System with IBASE IB916 3.5" Single Board Computer 6th Gen Intel® Core™ U-series Processor	67
ASB200-918	Fanless System with IBASE IB918 3.5" Single Board Computer AMD Ryzen™ Embedded V1000/R1000 Processor	68
ASB200-919	Fanless System with IBASE IB919 3.5" Single Board Computer 8th Gen Intel® Core™ U-Series Processor	69
ASB200-953	Fanless System with IBASE IB953 3.5" Single Board Computer 11th Gen Intel® Core™ U-Series Processor	70
NEW ASB200-837	Fanless System with IBASE IB837 3.5" Single Board Computer Intel® Celeron® N6210 & Celeron® J6412 Series	71
NEW ASB200-838	Slim System with IBASE IB838 3.5" Single Board Computer Intel® Atom® N-Series	72
ASB210-953	Slim System with IBASE IB953 3.5" Single Board Computer 11th Gen Intel® Core™ U-Series Processor	73
NEW ASB210-961	Slim System with IBASE IB961 3.5" Single Board Computer 13th Gen Intel® Core™ RPL-P Series Processor	74

CSB Series

CSB200-818	Fanless System with IBASE IB818 3.5" Single Board Computer Intel® Atom® Processors E3940/ E3930 & Pentium® N4200/ Celeron® N3350 Series	75
CSB200-822	Fanless System with IBASE IB822 3.5" Single Board Computer Intel® Pentium® Silver Processor J5040	76

CMB Series

CMB100 series	High Performance Expandable Industrial Computer Powered by 7th/6th Gen Intel® Core DT processors	77
CMB106 Series	High Performance Expandable Industrial Computer Powered by 9th/8th/7th/6th Gen Intel® Core DT processors	78
NEW CMB108	Compact Expandable Fanless System Powered by 13th/12th Gen Intel® Core™ i9/i7/i5/i3 Desktop Processors	79
Embedded Function Cards		80-81
Mini PCI-E Cards with Expansion		82

About IBASE

February 2000	Founded
Taipei, Taiwan	HQ
C. S. Lin	Chairman

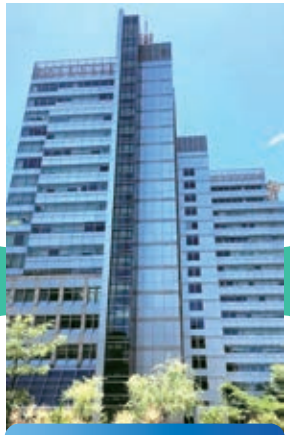

Design and Manufacturing of Robust Computing Platforms

Capital	US$65.8M
Stock Code	TPEx 8050 (Since 2003)
Employees	920 (Worldwide) 700 (IBASE HQ)

Company Profile

IBASE Technology specializes in the design and manufacture of robust industrial PC, products since its establishment in 2000. IBASE carries out manufacturing and quality control at its own facilities in Taiwan that are certified with ISO 9001, ISO 13485, ISO 14001 and ISO 27001 standards. Current offerings comprise x86 and RISC-based industrial motherboards, embedded systems, panel PCs, network appliances and digital signage players. The company is publicly listed in the Taipei Exchange (TPEx: 8050) and is now a leading global provider of innovative industrial and embedded computing solutions.

Core Competence

IBASE has three manufacturing sites in Taiwan, with two in New Taipei City and another one in Taoyuan City. We manufacture and implement strict quality control to supply excellent industrial computer products that are 100% made in Taiwan. In addition to off-the-shelf products, IBASE also specializes in OEM/ODM/JDM services, tailoring products to fully meet customers' expectations and the needs of various applications. With manufacturing and quality control capabilities recognized by major international companies, IBASE boasts of strong innovative R&D teams and flexible and timely products delivery.

Design & Manufacturing Services

Set up to become a global leading provider of embedded board and system solutions, IBASE manufacturers and supplies cutting-edge products based on the latest technologies to match market demands. Our R&D and product management teams have the expertise to design and develop products that are innovative and meet customers' requirements and design specifications. We attach great importance to research and development, investing heavily in manpower and resources to continuously provide high-quality innovative products. IBASE is also committed to compliance with environmental policies by working to prevent pollution with non-use of banned or restricted substances in our production process and products, helping our customers respond to their environmental challenges.

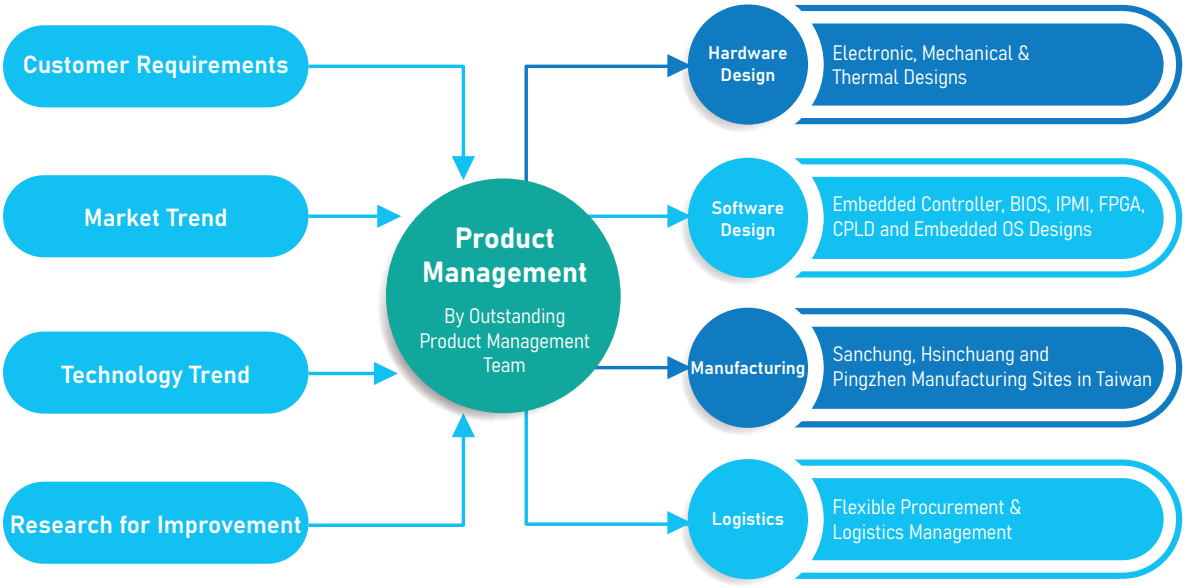

IBASE Manufacturing Sites

SANCHUNG

- Board Production
- Validation

3,124 m² / 945 Ping

HSINCHUANG

- System Assembly
- Validation

6,070 m² / 1,840 Ping

PINGZHEN

- Board Production
- System Assembly
- Validation

18,481 m² / 5,591 Ping

Total Size

297,891 Square-feet
(27,675 m² / 8,376 Ping)

Capacity

- SMT Line x 5
- DIP Assembly Line x 4
- System Assembly Line x 10
- Cleanroom x 2
- Burn-in Room x 13

PCBA
80K/month (In-house Production)
+ Outsourcing
System Assembly
50K/month (In-house Production)
+ Outsourcing

Certifications

ISO 9001 ISO 14001 ISO 13485 ISO 27001

IBASE IIoT Solutions

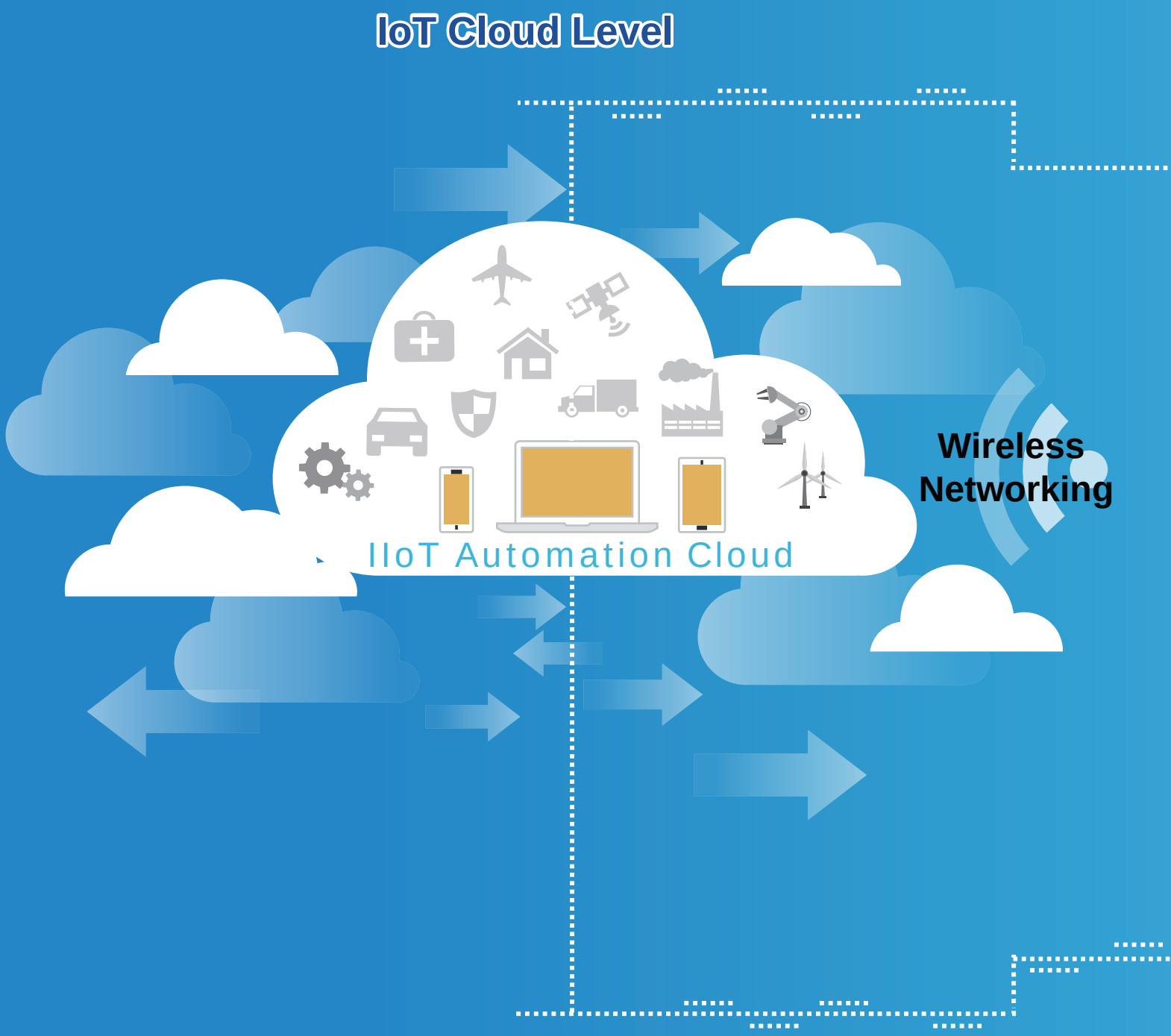

Communication Level

IoT Gateway
AGS100/AGS100T
AGS101T

Data
Extraction
Conversion

Field
Protocols
Connection

IoT Gateway
AGS102/AGS102T
AGS103T

Automation Equipment Level

Robotic-Arm Control

AMI230 Series

AMS300 Series

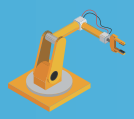

Robotics Solution

Factory Automation

AMS210 Series

ASB200 Series

CSB200 Series

Softlogic Controller

Automation I/O

- Profibus
- Profinet

Machine Automation

AMI220 Series
(CNC Controller)

AMS300 Series
(EtherCAT Master Controller)

CMI222 Series
(Machine Controller)

CMI212 Series
(Machine Controller)

CMI211 Series
(Bender Machine)

Smart Factory

IBASE intelligent computing platforms are used in modular structured smart factories where systems remotely monitor and control physical processes over the Internet of Things for communication in real time between systems and with humans across the chain of operation. Smart factories are designed with the interconnection of machines, devices, sensors and users in mind in order to collect data and information from all points in the manufacturing process such as robotic control, vision inspection, assembly line and unmanned logistics station where IBASE intelligent systems can be used.

Robotic Control

AMS300
P.30-31

AMI222
P.44-45

Vision Inspection

Assembly Line

AGS102
P.24-25

AMI221
P.42-43

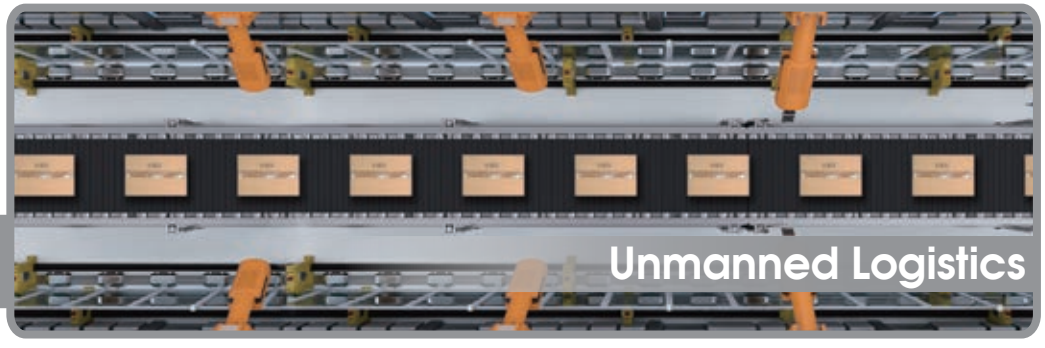

Unmanned Logistics

Intelligent Transportation Gateway

IBASE intelligent transportation systems can be deployed to different points in transport networks for transport and traffic management, with applications in traffic monitoring, automatic fare collection, automatic gateway and smart parking gateway. Designed as IoT and Machine-to-Machine gateways, IBASE transportation solutions deliver unprecedented computing performance and feature extended operating temperature, wide-range power input and hardware monitoring for CPU temperature and voltages to handle data and processing analysis requirements from various stations and sensors with improved reliability even in harsh environments.

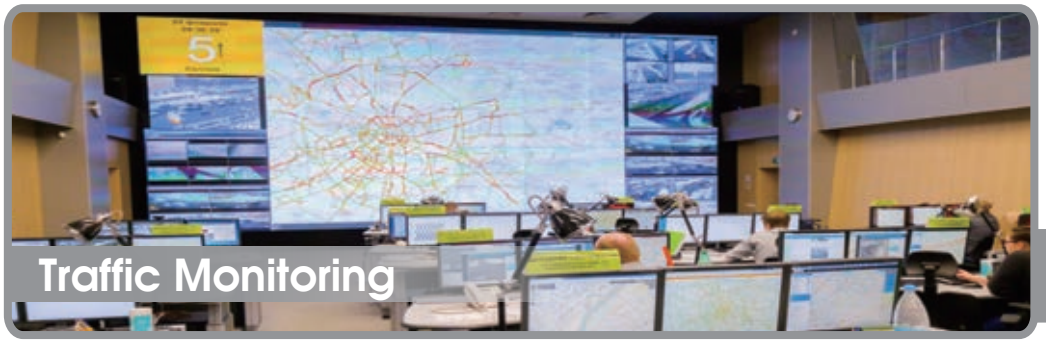

Traffic Monitoring

AMS302
P.36-37

CSB200-818
P.75

Automatic Fare Collection

Automatic Gateway Controller

AGS103T
P.26-27

AGS102T
P.24-25

Intelligent Parking Gateway

Rugged and Embedded

IBASE intelligent embedded systems include compact and integrated platforms which offer fast time-to-market solutions with reliable and rugged designs, and operation in harsh environments conditions with a temperature range of -40°C ~ 70°C. These systems come with high scalability, rich I/O connectivity and embedded longevity, suitable in industrial applications including automation, control and transportation.

CSB200-818
P.75

ASB200-916
P.67

Surveillance/Video Analytics

Intelligent surveillance and video analytics systems are used in video analytic applications such as motion detection, flame and smoke detection, shape recognition, face recognition, tamper detection and video tracking. These platforms deliver high computing and graphics performance with advanced networking and seamless I/O speeds for image capture, data transfers and video transmission.

AMS301
P.34-35

CMI300-988
P.64-65

Comparison Table

Models		AGS100	AGS100T	AGS101T
System	Processor	Intel® Atom® x7-E3950/ x5-E3940/ x5-E3930 & Pentium® N4200/ Celeron® N3350 Processors	Intel® Atom® x7-E3950/ x5-E3940/ x5-E3930 & Pentium® N4200/ Celeron® N3350 Processors	Intel® Atom® x6RE/ x6414RE Processors
	PCH	N/A	N/A	N/A
	Memory	1x DDR3L-1866 SO-DIMM	1x DDR3L-1866 SO-DIMM	1x DDR4-3200 SO-DIMM
	Max. Memory	8GB	8GB	16GB
	Graphics	Intel® HD Graphics 505	Intel® HD Graphics 505	Intel® Gen11 UHD Graphics
I/O Interface	Display	1x DisplayPort 1x DVI-I	1x DisplayPort 1x DVI-I	1x HDMI 1x DVI-I
	Ethernet	For E-series CPU: Intel® I210IT GbE LAN For N-series CPU: Intel® I211AT GbE LAN	For E-series CPU: Intel® I210IT GbE LAN For N-series CPU: Intel® I211AT GbE LAN	3x Intel® I225IT 2.5G GbE LAN
	Serial Port	2x RS232/RS422/485	2x RS232/RS422/485	2x RS232/RS422/485 2x RS232
	USB	4x USB 3.0	4x USB 3.0	2x USB 3.1 2x USB 2.0
	Audio	1x Speaker-out	1x Speaker-out	1x Speaker-out & Mic-in
	Digital I/O	N/A	N/A	4-in & 4-out
Storage Interface	SATA HDD	N/A	N/A	1x 2.5" slot
	mSATA/M.2	1x mSATA 1x 3042 M.2 B-Key socket 1x 2230 M.2 E-Key socket	1x mSATA 1x 3042 M.2 B-Key socket 1x 2230 M.2 E-Key socket	1x mSATA
Expansion Slots	PCI Express	N/A	N/A	N/A
	Mini PCI-E/M.2	1x Mini PCI-E slot	1x Mini PCI-E slot	2x Mini PCI-E slot 1x M.2 B-Key
Power	Power input	9V~36V DC-input	9V~36V DC-input	9V~36V DC-input
	Power Connector	3-pin terminal block	3-pin terminal block	3-pin terminal block
	Power Protection	OVP, UVP, Reverse voltage protection	OVP, UVP, Reverse voltage protection	OVP, UVP, Reverse voltage protection
Mechanical	Dimensions	160mm (W) x 110mm (D) x 44mm (H)	160mm (W) x 110mm (D) x 44mm (H)	190mm (W) x 110mm (D) x 52mm (H)
	Weight	1kg	1kg	TBD
	Construction	Aluminum & steel	Aluminum & steel	Aluminum & steel
	Chassis Color	Silver & Gray	Silver & Gray	Silver & Gray
	Mounting	Desktop & wall mount DIN-rail mount	Desktop & wall mount DIN-rail mount	Desktop & wall mount DIN-rail mount
Environmental	Operating Temperature	For E-series CPU: -40°C~70°C (-40°F~158°F) For N-series CPU: -20°C~60°C (-4°F~140°F)	For E-series CPU: -40°C~70°C (-40°F~158°F) For N-series CPU: -20°C~60°C (-4°F~140°F)	-20°C~70°C (-4°F~158°F)
	Storage Temperature	-40°C~85°C (-40°F~185°F)	-40°C~85°C (-40°F~185°F)	-40°C~85°C (-40°F~185°F)
	Certification	CE/FCC/LVD/CCC/UL	CE/FCC/LVD/UL	CE/FCC/LVD(pre-scan)
	Others	N/A	TPM 2.0	TPM 2.0
	Page No.	p. 20 - 21	p. 20 - 21	p. 22 - 23

Remarks: 1. Specifications are subject to change without prior notice. 2. ODM/OEM is available. 3. For user's manual & datasheet download, visit www.ibase.com.tw.

Comparison Table

IoT Gateway Computer

Models		AGS102	AGS102T	AGS103T
System	Processor	Intel® Atom® x7-E3950/ x5-E3940/ x5-E3930 & Pentium® N4200/ Celeron® N3350 Processors	Intel® Atom® x7-E3950/ x5-E3940/ x5-E3930 & Pentium® N4200/ Celeron® N3350 Processors	Intel® Atom® x6RE/ x6414RE Processors
	PCH	N/A	N/A	N/A
	Memory	1x DDR3L-1866 SO-DIMM	1x DDR3L-1866 SO-DIMM	1x DDR4-3200 SO-DIMM
	Max. Memory	8GB	8GB	16GB
	Graphics	Intel® HD Graphics 505	Intel® HD Graphics 505	Intel® Gen11 UHD Graphics
I/O Interface	Display	1x DisplayPort 1x DVI-I	1x DisplayPort 1x DVI-I	1x HDMI 1x DVI-I
	Ethernet	For E-series CPU: Intel® I210IT GbE LAN For N-series CPU: Intel® I211AT GbE LAN	For E-series CPU: Intel® I210IT GbE LAN For N-series CPU: Intel® I211AT GbE LAN	3x Intel® I225IT 2.5G GbE LAN
	Serial Port	2x RS232/RS422/485 2x RS232	4x RS232/RS422/485	2x RS232/RS422/485 2x RS232
	USB	4x USB 3.0 1x USB 2.0	4x USB 3.0 1x USB 2.0	2x USB 3.1 2x USB 2.0
	Audio	1x Speaker-out	1x Speaker-out	1x Speaker-out & Mic-in
	Digital I/O	4-in & 4-out	4-in & 4-out	4-in & 4-out
Storage Interface	SATA HDD	N/A	N/A	1x 2.5" slot (for AGS103TS)
	mSATA/M.2	1x mSATA 1x 3042 M.2 B-Key socket 1x 2230 M.2 E-Key socket	1x mSATA 1x 3042 M.2 B-Key socket 1x 2230 M.2 E-Key socket	1x mSATA
Expansion Slots	PCI Express	N/A	N/A	N/A
	Mini PCI-E/M.2	1x Mini PCI-E slot	1x Mini PCI-E slot	2x Mini PCI-E slot 1x M.2 B-Key
Power	Power input	9V~36V DC-input	9V~36V DC-input	9V~36V DC-input
	Power Connector	3-pin terminal block	3-pin terminal block	3-pin terminal block
	Power Protection	OVP, UVP, Reverse voltage protection	OVP, UVP, Reverse voltage protection	OVP, UVP, Reverse voltage protection
Mechanical	Dimensions	160mm (W) x 110mm (D) x 44mm (H)	160mm (W) x 110mm (D) x 44mm (H)	190mm (W) x 110mm (D) x 52mm (H)
	Weight	1kg	1kg	1.2kg
	Construction	Aluminum & steel	Aluminum & steel	Aluminum & steel
	Chassis Color	Silver & Gray	Silver & Gray	Silver & Gray
	Mounting	Desktop & wall mount DIN-rail mount	Desktop & wall mount DIN-rail mount	Desktop & wall mount DIN-rail mount
Environmental	Operating Temperature	For E-series CPU: -40°C~70°C (-40°F~158°F) For N-series CPU: -20°C~60°C (-4°F~140°F)	For E-series CPU: -40°C~70°C (-40°F~158°F) For N-series CPU: -20°C~60°C (-4°F~140°F)	-20°C~70°C (-4°F~158°F)
	Storage Temperature	-40°C~85°C (-40°F~185°F)	-40°C~85°C (-40°F~185°F)	-40°C~85°C (-40°F~185°F)
	Certification	CE/FCC/LVD/CCC/UL	CE/FCC/LVD/UL	CE/FCC/LVD(pre-scan)
	Others	N/A	TPM 2.0	TPM 2.0
	Page No.	p. 24 - 25	p. 24 - 25	p. 26 - 27

Remarks: 1. Specifications are subject to change without prior notice. 2. ODM/OEM is available. 3. For user's manual & datasheet download, visit www.ibase.com.tw.

Comparison Table

Expandable Modular System

Models		AMS210	AMS300/AMS300-1	AMS301	AMS302	AMS310
System	Processor	9th/8th Gen Intel® Core™ i7/ i5/i3 Desktop Processors (35W TDP)	7th/6th Gen Intel® Core™ DT i7/ i5/i3 Processors (Max. 35W TDP)	7th/6th Gen Intel® Core™ DT i7/ i5/i3 Processors (Max. 35W TDP)	7th/6th Gen Intel® Core™ DT i7/ i5/i3 Processors (Max. 35W TDP)	10th Gen Intel® Core™ DT i7/i5/ i3 Processors (Max. 35W TDP)
	PCH	Intel® Q370 PCH	Intel® Q170 PCH	Intel® Q170 PCH	Intel® Q170 PCH	Intel® H420E PCH
	Memory	2x 4GB DDR4-2666/2400 SO-DIMM	2x DDR4-2133 SO-DIMM	2x DDR4-2133 SO-DIMM	2x DDR4-2133 SO-DIMM	2x DDR4-2933 SO-DIMM
	Max. Memory	32GB	32GB	32GB	32GB	64GB
	Graphics	Intel® HD Graphics	Intel® HD Graphics 530	Intel® HD Graphics 530	Intel® HD Graphics 530	10th Gen Intel® DT processor integrated HD Gfx
I/O Interface	Display	3x DisplayPort	1x DisplayPort 1x DVI-I	1x DisplayPort 1x DVI-I	1x DisplayPort 1x DVI-I	2x DisplayPort 1x HDMI
	Ethernet	1x Intel® I219LM GbE PHY 1x Intel® I210IT Gigabit LAN 1x Intel® I210IT Gigabit LAN 1x Intel® I210IT Gigabit LAN	AMS300: 1x Intel® I219LM Gigabit LAN PHY 1x Intel® I211AT Gigabit LAN AMS300-1: 1x Intel® I219LM Gigabit LAN PHY 2x Intel® I211-AT or 2x Intel® I210-AT Gigabit LAN	1x Intel® I219LM Gigabit LAN PHY 1x Intel® I211AT Gigabit LAN	1x Intel® I219LM Gigabit LAN PHY 1x Intel® I211AT Gigabit LAN	2x Intel® I225V 2.5G LAN
	Serial Port	1x RS232/RS422/485 3x RS232 (optional)	AMS300: 1x RS232/RS422/485 1x RS232 AMS300-1: N/A	1x RS232/RS422/485 1x RS232 2x RS232 (optional)	1x RS232/RS422/485 1x RS232 2x RS232 (optional)	1x RS232/RS422/485 1x RS232
	USB	4x USB 3.1 4x USB 2.0	4x USB 3.0 2x USB 2.0	4x USB 3.0 2x USB 2.0	4x USB 3.0 2x USB 2.0	4x USB 3.0 2x USB 2.0
	Audio	1x Line-out	1x Line-out	1x Line-out	1x Line-out	1x Line-out
	Digital I/O	4-in & 4-out (optional)	4-in & 4-out (optional)	4-in & 4-out (optional)	4-in & 4-out (optional)	4-in & 4-out (optional)
Storage Interface	SATA HDD	2x 2.5" HDD or SSD	2x 2.5" HDD or SSD	2x 2.5" HDD or SSD	2x 2.5" HDD or SSD	1x 2.5" HDD or SSD
	mSATA/M.2	1x mSATA via mPCI-E	1x mSATA	1x mSATA	1x mSATA	1x M.2 M-Key 2280 SATA SSD
Expansion Slots	PCI Express	2x PCI-E (x16) (by ABP-IP701/ ABP-IP702/ABP-IP703)	N/A	N/A	1x PCI-E (x8) + 1x PCI-E (x4)	1x PCI-E (x8) + 1x PCI-E (x4)
	Mini PCI-E/ M.2	1x Mini PCI-E slot	1x Mini PCI-E slot	4x Mini PCI-E slot	1x Mini PCI-E slot	1x M.2 E-Key 1x M.2 B-Key
Power	Power input	24V(±10%) DC-input	24V(±10%) DC-input	24V(±10%) DC-input	24V(±10%) DC-input	24V(±10%) DC-input
	Power Connector	3-pin DC-in terminal block	3-pin terminal block	3-pin terminal block	3-pin terminal block	3-pin terminal block
	Power Protection	Reverse voltage	OVP, UVP, Reverse voltage protection	OVP, UVP, Reverse voltage protection	OVP, UVP, Reverse voltage protection	OVP, UVP, Reverse voltage protection
Mechanical	Dimensions	297.4mm (W) x 266.2mm (D) x 78.5mm (H)	275mm (W) x 140mm (D) x 70mm (H)	275mm (W) x 140mm (D) x 117mm (H)	275mm (W) x 140mm (D) x 117mm (H)	275mm (W) x 150mm (D) x 117mm (H)
	Weight	3.7 kg	2.7kg	3.3kg	3.3kg	3.3kg
	Construction	SGCC	Aluminum & steel	Aluminum & steel	Aluminum & steel	Aluminum & steel
	Chassis Color	Silver	Silver & Gray	Silver & Gray	Silver & Gray	Silver & Gray
	Mounting	Desktop or wall mount	Desktop & wall mount DIN-rail mount	Desktop & wall mount DIN-rail mount	Desktop & wall mount DIN-rail mount	Desktop & wall mount DIN-rail mount
Environmental	Operating Temperature	0°C to 55°C (32°F~131°F)	-10°C to 60°C (14°F~140°F) *With airflow -10°C to 50°C (14°F to 122°F) *without airflow	-10°C to 60°C (14°F~140°F) *With airflow -10°C to 50°C (14°F to 122°F) *without airflow	-10°C to 60°C (14°F~140°F) *With airflow -10°C to 50°C (14°F to 122°F) *without airflow	-10°C to 60°C (14°F~140°F) *With airflow -10°C to 50°C (14°F to 122°F) *without airflow
	Storage Temperature	-20°C~80°C (-4°F~176°F)	-20°C~80°C (-4°F~176°F)	-20°C~80°C (-4°F~176°F)	-20°C~80°C (-4°F~176°F)	-20°C~80°C (-4°F~176°F)
	Certification	CE/FCC/LVD (Prescan only)	CE/FCC/LVD	CE/FCC/LVD	CE/FCC/LVD	CE/FCC/LVD
	Page No.	p. 28 - 29	p. 30 - 33	p. 34 - 35	p. 36 - 37	p. 38

Remarks: 1. Specifications are subject to change without prior notice. 2. ODM/OEM is available. 3. For user's manual & datasheet download, visit www.ibase.com.tw.

Comparison Table

Expandable Modular System

Models		AMS312	AMS322	AMI220	AMI221
System	Processor	10th Gen Intel® Core™ DT i7/i5/i3 Processors (Max. 35W TDP)	11th Gen Inte® Core™ i7/i5/i3 Processors	7th/6th Gen Intel® Core™DT i7/i5/i3 Processors (Max. 35W TDP)	7th/6th Gen Intel® Core™ DT i7/i5/i3 Processors (Max. 35W TDP)
	PCH	Intel® Q470E PCH	N/A	Intel® Q170 PCH Intel® H110 PCH	Intel® Q170 PCH TDP Intel® H110 PCH TDP
	Memory	2x DDR4-2933 SO-DIMM	2x DDR4 3200 SO-DIMM, Max. 64GB	2x 4GB DDR4-2400 SO-DIMM	2x 4GB DDR4-2400 SO-DIMM
	Max. Memory	64GB	64GB	32GB	32GB
	Graphics	10th Gen Intel® DT processor integrated HD Gfx	Intel® Iris® Xe Graphics	Intel® HD Graphics 530	Intel® HD Graphics 530
I/O Interface	Display	2x DisplayPort 1x HDMI	2x DisplayPort	1x DVI-D, 1x VGA 2x DisplayPort	1x DVI-D, 1x VGA 2x DisplayPort
	Ethernet	2x Intel® I225V 2.5G LAN	3x Intel® I226V 2.5G LAN	1x Intel® I219LM Gigabit LAN PHY 1x Intel® I211AT Gigabit LAN	1x Intel® I219LM Gigabit LAN PHY 1x Intel® I211AT Gigabit LAN
	Serial Port	1x RS232/RS422/485 1x RS232	1x RS232/RS422/485 1x RS232	1x RS232/RS422/485 3x RS232	1x RS232/RS422/485 5x RS232
	USB	4x USB 3.0 2x USB 2.0	3x USB 3.1 3x USB2.0	4x USB 3.0 4x USB 2.0	4x USB 3.0 6x USB 2.0
	Audio	1x Line-out	1x Line-out	1x Line-out, 1x MIC-in	1x Line-out, 1x MIC-in
	Digital I/O	4-in & 4-out (optional)	4-in & 4-out (optional)	4-in & 4-out (optional)	4-in & 4-out (optional)
Storage Interface	SATA HDD	1x 2.5" HDD or SSD	1x 2.5" HDD or SSD	1x 2.5" HDD or SSD	2x 2.5" HDD or SSD
	mSATA/M.2	1x M.2 M-Key 2280 SATA SSD	N/A	2x mSATA (AMI220AF) 1x mSATA (AMI220EF)	2x mSATA (AMI221AF) 1x mSATA (AMI221EF)
Expansion Slots	PCI Express	1x PCI-E (x8) + 1x PCI-E (x4)	1x PCI-E (x8) + 1x PCI-E (x4)	N/A	1x PCI-E (x16) + 1x PCI
	Mini PCI-E/M.2	1x M.2 E-Key 1x M.2 B-Key	1x M.2 2042 E-key (USB2.0 & PCI-E) 1x M.2 3052 B-key (USB2.0 & 3.0)	2x Mini PCI-E slot	2x Mini PCI-E slot
Power	Power input	24V(±10%) DC-input	24V(±10%) DC-input	12V(-10%) ~ 24V(+10%) DC-input	12V(-10%) ~ 24V(+10%) DC-input
	Power Connector	3-pin terminal block	3-pin terminal block	3-pin terminal block DC-jack (optional)	3-pin terminal block DC-jack (optional)
	Power Protection	OVP, UVP, Reverse voltage protection	OVP, UVP, Reverse voltage protection	OVP, UVP, Reverse voltage protection	OVP, UVP, Reverse voltage protection
Mechanical	Dimensions	275mm (W) x 150mm (D) x 117mm (H)	275mm (W) x 140mm (D) x 117mm (H)	210mm (W) x 265mm (D) x 71.4mm (H)	210mm (W) x 265mm (D) x 108.6mm (H)
	Weight	3.5Kg	3.5Kg	3.6 kg	4.3 kg
	Construction	Aluminum & steel	Aluminum & steel	Aluminum & steel	Aluminum & steel
	Chassis Color	Silver & Gray	Silver & Gray	Silver & Gray	Silver & Gray
	Mounting	Desktop or wall mounting (wall mount kit included) Side mounting DIN-rail mounting (optional)	Desktop or wall mounting (wall mount kit included) Side mounting DIN-rail mounting (optional)	Desktop & wall mount	Desktop & wall mount
Environmental	Operating Temperature	-10°C to 60°C (14°F~140°F) *with air flow -10°C to 50°C (14°F to 122°F) without air flow	-10°C to 60°C (14°F~140°F) *with air flow -10°C to 50°C (14°F to 122°F) without air flow	-10°C~50°C (14°F~122°F)	-10°C~50°C (14°F~122°F)
	Storage Temperature	-20°C~80°C (-4°F~176°F)	-20°C~80°C (-4°F~176°F)	-20°C~80°C (-4°F~176°F)	-20°C~80°C (-4°F~176°F)
	Certification	CE/FCC/LVD	CE/FCC/LVD	CE/FCC/LVD/CCC	CE/FCC/LVD
	Page No.	p. 39	p. 40	p. 41	p. 42 - 43

Remarks: 1. Specifications are subject to change without prior notice. 2. ODM/OEM is available. 3. For user's manual & datasheet download, visit www.ibase.com.tw.

Comparison Table

Expandable Modular System

AMI222	AMI230	AMI231	AMI232	AMI240
7th/6th Gen Intel® Core™ DT i7/i5/i3 Processors (Max. 35W TDP)	9th/8th Gen Intel® Core™ i7/i5/i3 Desktop Processors (35W TDP)	9th/8th Gen Intel® Core™ i7/i5/i3 Desktop Processors (35W TDP)	9th/8th Gen Intel® Core™ i7/i5/i3 Desktop Processors (35W TDP)	13th Gen Intel® CoreTM i9/i7/i5/i3 Desktop Processors (35W TDP)
Intel® Q170 PCH TDP Intel® H110 PCH TDP	Intel® Q370 PCH	Intel® Q370 PCH	Intel® Q370 PCH	Intel® Q670E PCH
2x 4GB DDR4-2400 SO-DIMM	2x DDR4-2666/2400 SO-DIMM	2x 8GB DDR4-2666/2400 SO-DIMM	2x 8GB DDR4-2666/2400 SO-DIMM	2x DDR5-5600/4800 SO-DIMM
32GB	32GB	32GB	32GB	64GB
Intel® HD Graphics 530	Intel® HD Graphics	Intel® HD Graphics	Intel® HD Graphics	Intel® HD Graphics
1x DVI-D, 1x VGA 2x DisplayPort	1x HDMI+ DisplayPort 1x DVI-D	1x HDMI+ DisplayPort 1x DVI-D	1x HDMI+ DisplayPort 1x DVI-D	2x HDMI 1x Diaplayport
1x Intel® I219LM Gigabit LAN PHY 1x Intel® I211AT Gigabit LAN	1x Intel® I219LM GbE PHY 1x Intel® I210IT Gigabit LAN 1x Intel® I211AT Gigabit LAN 1x Intel® I211AT Gigabit LAN *2 supports PoE+*	1x Intel® I219LM GbE PHY 1x Intel® I210IT Gigabit LAN 1x Intel® I211AT Gigabit LAN 1x Intel® I211AT Gigabit LAN *2 supports PoE+*	1x Intel® I219LM GbE PHY 1x Intel® I210IT Gigabit LAN 1x Intel® I211AT Gigabit LAN 1x Intel® I211AT Gigabit LAN *2 supports PoE+*	1x Intel® I226-LM 2.5Gigabit LAN 1x Intel® I226-V 2.5Gigabit LAN 1x Intel® I211IT Gigabit LAN 1x Intel® I211IT Gigabit LAN *2 supports PoE+*
1x RS232/RS422/485 5x RS232	1x RS232/RS422/485 3x RS232	1x RS232/RS422/485 3x RS232	1x RS232/RS422/485 3x RS232	2x RS232/RS422/485 2x RS232
4x USB 3.0 6x USB 2.0	8x USB 3.1	8x USB 3.1	8x USB 3.1	8x USB 3.1
1x Line-out, 1x MIC-in	1x Line-out, 1x MIC-in	1x Line-out, 1x MIC-in	1x Line-out, 1x MIC-in	1x Line-out, 1x MIC-in
4-in & 4-out (optional)	4-in & 4-out (optional)	4-in & 4-out (optional)	4-in & 4-out (optional)	4-in & 4-out (optional)
2x 2.5" HDD or SSD	1x 2.5" HDD or SSD	2x 2.5" HDD or SSD	2x 2.5" HDD or SSD	1x 2.5" HDD or SSD
2x mSATA (AMI222AF) 1x mSATA (AMI222EF)	1x M.2 (M-Key)	1x M.2 (M-Key)	1x M.2 (M-Key)	1x M.2 (M-Key)
1x PCI-E (x8) + 1x PCI-E (x1) or 1x PCI-E (x16) + 1x PCI	N/A	1x PCI-E (x16) + 1x PCI	1x PCI-E (x8) + 1x PCI-E (x1) or 1x PCI-E (x16) + 1x PCI	N/A
4x Mini PCI-E slot	3x M.2 (B-Key/E-Key/M-Key)	3x M.2 (B-Key/E-Key/M-Key)	3x M.2 (B-Key/E-Key/M-Key)	3x M.2 (B-Key/E-Key/M-Key)
12V(-10%) ~ 24V(+10%) DC-input	12V(±10%) or 18V(-10%)~24V(+10%) DC-input	12V(±10%) or 18V(-10%)~24V(+10%) DC-input	12V(±10%) or 18V(-10%)~24V(+10%) DC-input	24V(+10%) DC-input
3-pin terminal block DC-jack (optional)	5-pin DC-in terminal block	5-pin DC-in terminal block	5-pin DC-in terminal block	5-pin DC-in terminal block
OVP, UVP, Reverse voltage protection	OVP, UVP, Reverse voltage protection	OVP, UVP, Reverse voltage protection	OVP, UVP, Reverse voltage protection	OVP, UVP, Reverse voltage protection
210mm (W) x 265mm (D) x 128.6mm (H)	210mm (W) x 265mm (D) x 77mm (H)	210mm (W) x 285mm(D) x 109mm (H)	210mm (W) x 285mm (D) x 128.6mm (H)	210mm (W) x 265mm (D) x 77mm (H)
4.3 kg	4 kg	4.5 kg	4.9 kg	TBD
Aluminum & steel	Aluminum & steel	Aluminum & steel	Aluminum & steel	Aluminum & steel
Silver & Gray	Silver & Gray	Silver & Gray	Silver & Gray	Silver & Gray
Desktop & wall mount	Desktop & wall mount	Desktop or wall mount	Desktop or wall mount	Desktop & wall mount
-10°C~50°C (14°F~122°F)	-20°C~70°C (-4°F~158°F) (for 35W CPU)	-20°C to 70°C (-4°F~158°F) (for 35W CPU)	-20°C to 70°C (-4°F~158°F) (for 35W CPU)	-20°C~70°C (-4°F~158°F) (for 35W CPU)
-20°C~80°C (-4°F~176°F)	-20°C~80°C (-4°F~176°F)	-20°C~80°C (-4°F~176°F)	-20°C~80°C (-4°F~176°F)	-20°C~80°C (-4°F~176°F)
CE/FCC/LVD	CE/FCC/LVD	CE/FCC/LVD	CE/FCC/LVD	CE/FCC/LVD
p. 44 - 45	p. 46 - 47	p. 48 - 49	p. 50 - 51	p. 52 - 53

Remarks: 1. Specifications are subject to change without prior notice. 2. ODM/OEM is available. 3. For user's manual & datasheet download, visit www.ibase.com.tw.

Comparison Table

Models		ASB200-915	ASB200-916	ASB200-918	ASB200-919
System	Processor	6th Gen Intel® Core™ U-series Processor	7th Gen Intel® Core™ U-series Processor	AMD Ryzen™ Embedded V1000 / R1000 Series	8th Gen Intel® Core™ U-Series Processor
	PCH	N/A	N/A	N/A	N/A
	Memory	2x DDR3L-1600 SO-DIMM	2x DDR3L-1600 SO-DIMM	2x 8GB DDR4-2666 SO-DIMM	2x 8GB DDR4-2666 SO-DIMM
	Max. Memory	16GB	32GB	32GB	32GB
	Graphics	Intel® HD Graphics 520	Intel® HD Graphics 620	AMD Radeon™ Vega integrated	Intel® UHD Graphics 610
I/O Interface	Display	1x DisplayPort	1x DisplayPort, 1x HDMI	2x HDMI	2x DisplayPort (1 by Type-C)
	Ethernet	1x Intel® I219LM Gigabit LAN PHY 1x Intel® I211AT Gigabit LAN	1x Intel® I219LM Gigabit LAN PHY 1x Intel® I211AT Gigabit LAN	2x Intel®1211AT PCI-E Gigabit LAN	1x Intel® I219LM Gigabit LAN PHY for IB919AF Series (Intel® I219V Gigabit LAN PHY for IB919EF Series) 1x Intel® I211AT PCI-E Gigabit LAN
	Serial Port	1x RS232/RS422/485 3x RS232	1x RS232/RS422/485 3x RS232"	1x RS232/422/485	1x RS232/422/485
	USB	1x USB 3.1 Type-C 4x USB 3.0 2x USB 2.0	4x USB 3.0 2x USB 2.0	4 x USB 3.1 1x USB 2.0	4x USB3.1
	Audio	1x Line-out, 1x Line-in, 1x MIC-in	1x Line-out, 1x Line-in, 1x MIC-in	1x Audio Jack for Line-out/ Line-in/ MIC-in	N/A
	Digital I/O	4-in & 4-out	4-in & 4-out	4-in & 4-out	4-in & 4-out
Storage Interface	SATA HDD	1x 2.5" HDD or SSD	1x 2.5" HDD or SSD	1x 2.5" HDD or SSD	1x 2.5" HDD or SSD
	mSATA/M.2	1x mSATA	1x mSATA	1x mSATA	N/A
Expansion Slots	PCI Express	N/A	N/A	N/A	N/A
	Mini PCI-E/M.2	1x Mini PCI-E slot	1x Mini PCI-E slot	2x M.2 (M-Key/E-Key)	2x M.2 (M-Key/E-Key)
Power	Power input	12V(-10%) ~ 24V(+10%) DC-input	12V(-10%) ~ 24V(+10%) DC-input	12V(-10%) ~ 24V(+10%) DC-input	12V(-10%) ~ 24V(+10%) DC-input
	Power Connector	3-pin terminal block DC-jack (optional)	3-pin terminal block DC-jack (optional)	3-pin terminal block DC-jack (optional)	3-pin terminal block DC-jack (optional)
	Power Protection	N/A	N/A	N/A	N/A
Mechanical	Dimensions	180mm(W) x 150mm(D) x 66mm(H)	180mm(W) x 150mm(D) x 66mm(H)	240mm (W) x 162mm (D) x 42mm (H)	180mm(W) x 150mm(D) x 66mm(H)
	Weight	1.8 kg	1.8 kg	1.7 kg	1.5kg
	Construction	Aluminum & steel	Aluminum & steel	Aluminum & steel	Aluminum & steel
	Chassis Color	Black	Black	Black	Black
	Mounting	Desktop & wall mount Optional VESA mount kit	Desktop & wall mount Optional VESA mount kit	Desktop or wall mount Optional VESA mount kit	Desktop or wall mount Optional VESA mount kit
Environmental	Operating Temperature	-10°C~50°C (14°F~122°F)	-10°C~50°C (14°F~122°F)	0°C~45°C (32°F~113°F)	0°C~45°C (32°F~113°F) *with air flow 0.9m/s
	Storage Temperature	-20°C~80°C (-4°F~176°F)	-20°C~80°C (-4°F~176°F)	-20°C ~80°C (-4°F~176°F)	-20°C ~80°C(-4°F~176°F)
	Certification	CE/FCC/LVD	CE/FCC/LVD	CE/LVD/FCC	CE/LVD/FCC
	Page No.	p. 66	p. 67	p. 68	p. 69

Remarks: 1. Specifications are subject to change without prior notice. 2. ODM/OEM is available. 3. For user's manual & datasheet download, visit www.ibase.com.tw.

Comparison Table

Models		ASB200-953	ASB200-837	ASB200-838
System	Processor	11th Gen Intel® Core™ U-Series Processor	Intel® Atom™ processors Celeron® N6210 & Pentium® J6412 Series	Intel® Atom® N Series
	PCH	N/A	N/A	N/A
	Memory	2x DDR4-3200 SO-DIMM	1x DDR4-3200 SO-DIMM	1x DDR5-4800 SO-DIMM
	Max. Memory	64GB	16GB	16GB
	Graphics	i7 & i5: Intel® Iris® Xe i3 & Celeron: Intel® UHD Graphics	1x DDR4-2400 SO-DIMM	Intel® UHD Graphics
I/O Interface	Display	2x DisplayPort	1x DisplayPort	1x DisplayPort
	Ethernet	i7 & i5: Intel® I219LM Gigabit LAN PHY i3 & Celeron: Intel® I219V Gigabit LAN PHY Intel® I211AT PCI-E Gigabit LAN (as 2nd LAN)	2x Intel® I226-V 2.5G LAN	2x Intel® I226-V 2.5G LAN
	Serial Port	1x RS232/422/485	1x RS232/RS422/485 3x RS232	1x RS232/RS422/485 3x RS232
	USB	3x USB 3.1 1x USB 2.0	2x USB3.1	2x USB3.1 1x USB 3.0
	Audio	N/A (optional)	1x Line-out, 1x Line-out, 1x MIC-in	1x Line-out, 1x Line-out, 1x MIC-in
	Digital I/O	4-in & 4-out	4-in & 4-out	4-in & 4-out
Storage Interface	SATA HDD	1x 2.5" HDD or SSD	1x 2.5" HDD or SSD	1x 2.5" HDD or SSD
	mSATA/M.2	1x M.2 2280 PCI-E SSD	1x mSATA	1x M.2 B-Key PCI-E
Expansion Slots	PCI Express	N/A	N/A	N/A
	Mini PCI-E/M.2	2x M.2 (B-Key/E-Key)	2x M.2 (B-Key/E-key)	2x M.2 (B-Key/E-key)
Power	Power input	12V(-10%) ~ 24V(+10%) DC-input	12V DC-input	12V(-10%) ~ 24V(+10%) DC-input
	Power Connector	3-pin terminal block DC-jack (optional)	3-pin terminal block DC-jack (optional)	3-pin terminal block DC-jack (optional)
	Power Protection	N/A	N/A	N/A
Mechanical	Dimensions	180mm(W) x 150mm(D) x 71mm(H)	172mm(W) x 111.6mm(D) x 53mm(H)	180mm(W) x 150mm(D) x 71mm(H)
	Weight	1.7 kg	TBD	TBD
	Construction	Aluminum & steel	Aluminum & steel	Aluminum & steel
	Chassis Color	Black	Black	Black
	Mounting	Desktop or wall mount Optional VESA mount kit	Desktop & wall mount	Desktop or wall mount Optional VESA mount kit
Environmental	Operating Temperature	0°C~45°C (32°F~113°F) *with air flow 0.9m/s	0°C~45°C (14°F~113°F) (With HDD) *With air flow 0°C~50°C (32°F~122°F) (With SSD) *With air flow	0°C~45°C (32°F~113°F) *with air flow 0.9m/s
	Storage Temperature	-20°C ~80°C(-4°F~176°F)	-40°C~85°C (-40°F~185°F)	-20°C ~80°C(-4°F~176°F)
	Certification	CE/LVD/FCC	CE/FCC/LVD	CE/FCC/LVD
	Page No.	p. 70	p. 71	p. 72

Remarks: 1. Specifications are subject to change without prior notice. 2. ODM/OEM is available. 3. For user's manual & datasheet download, visit www.ibase.com.tw.

Comparison Table

Models		ASB210-953	ASB210-961	CSB200-818	CSB200-822
System	Processor	11th Gen Intel® Core™ U-Series Processor	13th Gen Intel® Core™ RPL-P Series Processor	Intel® Atom® Processors E3930 & Pentium® N4200 / Celeron® N3350	Intel® Pentium® Silver Processor J5040
	PCH	N/A	N/A	N/A	N/A
	Memory	2x DDR4-3200 SO-DIMM	1x DDR5-4800 SO-DIMM	1x DDR3L-1866 SO-DIMM	1x DDR4-2400 SO-DIMM
	Max. Memory	64GB	32GB	8GB	8GB
	Graphics	i7 & i5: Intel® Iris® Xe i3 & Celeron: Intel® UHD Graphics	i7 & i5: Intel® Iris® Xe i3 & Celeron: Intel® UHD Graphics	Intel® HD Graphics 505	Intel® UHD Graphics 605
I/O Interface	Display	2x DisplayPort	2x DisplayPort	1x HDMI	1x HDMI, 1x DP
	Ethernet	i7 & i5: Intel® I219LM Gigabit LAN PHY i3 & Celeron: Intel® I219V Gigabit LAN PHY Intel® I211AT PCI-E Gigabit LAN (as 2nd LAN)	Intel® i7-1370PE Gigabit LAN Intel® i5-1340PE Gigabit LAN Intel® i3-1320PE Gigabit LAN	2x Intel® I210IT Gigabit LAN (For E-series CPU) 2x Intel® I210AT Gigabit LAN (For N-series CPU)	2x Intel® I211IT Gigabit LAN
	Serial Port	1x RS232/422/485	1x RS232/422/485	1x RS232/RS422/485 3x RS232	1x RS232/RS422/485 3x RS232
	USB	3x USB 3.1 1x USB 2.0	2x USB 3.2 1x USB 3.0 1x USB 2.0	4x USB 3.0 2x USB 2.0	4x USB 3.0 2x USB 2.0
	Audio	N/A (optional)	N/A (optional)	1x Line-out, 1x MIC-in	1x Line-out, 1x MIC-in
	Digital I/O	4-in & 4-out	4-in & 4-out	N/A	N/A
Storage Interface	SATA HDD	1x 2.5" HDD or SSD	1x 2.5" HDD or SSD	1x 2.5" HDD or SSD	1x 2.5" HDD or SSD
	mSATA/M.2	1x M.2 2280 PCI-E SSD	1x M.2 2280 PCI-E SSD	1x mSATA	1x mSATA
Expansion Slots	PCI Express	N/A	N/A	N/A	N/A
	Mini PCI-E/ M.2	2x M.2 (B-Key/E-Key)	3x M.2 (B-Key/E-Key/M-Key)	2x Mini PCI-E slot	2x M.2 (B-Key/E-key)
Power	Power input	12V(-10%) ~ 24V(+10%) DC-input	12V(-10%) ~ 24V(+10%) DC-input	12V(-10%) ~ 24V(+10%) DC-input	12V(±10%) DC-input
	Power Connector	3-pin terminal block DC-jack (optional)	3-pin terminal block DC-jack (optional)	3-pin terminal block DC-jack (optional)	3-pin terminal block DC-jack (optional)
	Power Protection	N/A	N/A	N/A	N/A
Mechanical	Dimensions	180mm(W) x 150mm(D) x 71mm(H)	180mm(W) x 150mm(D) x 72mm(H)	172mm(W) x 111.6mm(D) x 53mm(H)	172mm(W) x 111.6mm(D) x 53mm(H)
	Weight	1.8 kg	TBD	1.1 kg	1.1 kg
	Construction	Aluminum & steel	Aluminum & steel	Aluminum & steel	Aluminum & steel
	Chassis Color	Black	Black	Black	Black
	Mounting	Desktop or wall mount Optional VESA mount kit	Desktop or wall mount Optional VESA mount kit	Desktop & wall mount	Desktop & wall mount
Environmental	Operating Temperature	0°C~45°C (32°F~113°F) *with air flow 0.9m/s	0°C~45°C (32°F~113°F) *with air flow 0.9m/s	For E3940 CPU : -30°C~65°C (22°F~149°F) (With SSD) *With air flow For N-Series CPU: -10°C ~45°C(14°C~113°C) (With HDD) *With air flow	0°C~45°C (14°F~113°F) (With HDD) *With air flow 0°C~50°C (32°F~122°F) (With SSD) *With air flow
	Storage Temperature	-20°C ~80°C(-4°F~176°F)	-20°C ~80°C(-4°F~176°F)	-40°C~85°C (-40°F~185°F)	-40°C~85°C (-40°F~185°F)
	Certification	CE/LVD/FCC	CE/LVD/FCC Class-B	CE/FCC/LVD	CE/FCC/LVD
	Page No.	p. 73	p. 74	p. 75	p. 76

Remarks: 1. Specifications are subject to change without prior notice. 2. ODM/OEM is available. 3. For user's manual & datasheet download, visit www.ibase.com.tw.

Comparison Table

Models		CMB100	CMB106	CMB108
System	Processor	7th/6th Gen Intel® Core™ DT processors (TDP 65W)	7th/6th Gen Intel® Core™ DT processors (TDP 65W)	13th Gen Intel® Core™ DT processors (TDP 65W)
	PCH	Intel® C236	Intel® C236	Intel® Q670E
	Memory	2x DDR4 UIMM	4x DDR4 UIMM	2x DDR5-4800/5600 U-DIMM
	Max. Memory	32GB	64GB	64GB
	Graphics	Intel® Core I integrated Graphics	Intel® Core I integrated Graphics	Intel® Core I integrated Graphics
I/O Interface	Display	2x HDMI	2x HDMI	1x HDMI 2x DisplayPort
	Ethernet	Intel® I219LM Gigabit LAN Intel® I211AT PCI-E Gigabit LAN	Intel® I219LM Gigabit LAN Intel® I211AT PCI-E Gigabit LAN	Intel® I226LM 2.5 Gigabit LAN Intel® I226V 2.5 Gigabit LAN
	Serial Port	2x RS232/422/485, 2x RS232	2x RS232/422/485, 2x RS232	2x RS232/422/485, 2x RS232
	USB	6x USB 3.0 ports, 4x USB 2.0 (expandable)	6x USB 3.0 ports, 4x USB 2.0 (expandable)	4x USB 3.2 (Gen2) 2x USB3.1 (Gen1)
	Audio	Line-In/LINE-Out/MIC-out	Line-In/LINE-Out/MIC-out	Line-In/LINE-Out/MIC-out
	Digital I/O	4-IN/4-OUT	4-IN/4-OUT	4-IN/4-OUT
Storage Interface	SATA HDD	4x 2.5" SATA (supports RAID 0/1) +Mini PCI-E	4x 2.5" SATA (supports RAID 0/1) +Mini PCI-E	4x 2.5" SATA (supports RAID 0/1)
	mSATA/M.2	mSATA 1x M.2 slot [Thru PCI-E (x1) x4](NVMe)	mSATA 1x M.2 slot [Thru PCI-E (x1) x4](NVMe)	M.2 (M-Key)
Expansion Slots	PCI Express	1x PCI-E(x16), 1x PCI-E(x8), 1x PCI-E(x4)	1x PCI-E(x16), 1x PCI-E(x8), 1x PCI-E(x4)	1x PCI-E(16X) 2x PCI-E(x4)
	Mini PCI-E/M.2	1x MiniPCI-E 1x M.2 (M-Key)	1x MiniPCI-E 1x M.2 (M-Key)	4x M.2 (B-Key/ E-Key/ M-Key/M-Key)
Power	Power input	AC-IN 100V~240V	AC-IN 100V~240V	AC-IN 100V~240V
	Power Connector	ATX power	ATX power	ATX power
	Power Protection	N/A	N/A	N/A
Mechanical	Dimensions	362.4mm(W) x 350.0mm(D) x 156.0mm(H)	325mm(W) x 350mm(D) x 156mm(H)	325mm(W) x 350mm(D) x 156mm(H)
	Weight	Depends on the configuration of power supply and motherboard related components	Depends on the configuration of power supply and motherboard related components	Depends on the configuration of power supply and motherboard related components
	Construction	SECC	SECC	SECC
	Chassis Color	Black	Black	Black
	Mounting	Desktop & wall mount	Desktop & wall mount	Desktop & wall mount
Environmental	Operating Temperature	0°C~45°C (32°F~113°F) (for 65W CPU) @60°C, non-condensing	0°C~45°C (32°F~113°F) (for 65W CPU) @60°C, non-condensing	0°C~45°C (32°F~113°F) (for 65W CPU) @60°C, non-condensing
	Storage Temperature	-20°C~80°C (-4°F~176°F), @60°C, non-condensing	-20°C~80°C (-4°F~176°F), @60°C, non-condensing	-20°C~80°C (-4°F~176°F), @60°C, non-condensing
	Certification	CE FCC ClassA / LVD	CE FCC ClassA / LVD	CE FCC ClassA / LVD
	Page No.	p. 77	p. 78	p. 79

Remarks: 1. Specifications are subject to change without prior notice. 2. ODM/OEM is available. 3. For user's manual & datasheet download, visit www.ibase.com.tw.

AGS100/AGS100T

Ultra-Compact IoT Gateway Fanless System

Intel® Atom® x7/x5, Pentium® & Celeron® Processors

Rear I/O

Azure Certified Device

Features

- Intel® Atom® x7-E3950/x5-E3940/x5-E3930 & Pentium® N4200 / Celeron® N3350 Series Processors
- Over/Under/Reverse voltage protection
- Extended operating temperature from -40°C to 70°C
- 9V~36V DC wide-range power input
- Supports DIN-rail mount & wall mount
- Supports TPM2.0 (AGS100T Only)
- 2x RS232/422/485 serial ports
- Rugged and fanless design

Specifications

System Mainboard	IB801/ IB802T (F-1 Stepping)
CPU Type	Intel® Atom® x7-E3950/x5-E3940/x5-E3930 & Pentium® N4200/ Celeron® N3350 Series Processors
System Speed	Up to 2.5GHz
Memory	1x 4GB DDR3L-1866 SO-DIMM, Max. 8GB
Rear Panel External I/O	1x DVI-I + 1x DisplayPort 4x USB 3.0 ports 2x RJ45 Gigabit Ethernet port 3x LED indicators (HDD, WLAN, WWAN) 1x Power button with green LED (Silver Power button with Green LED for AGS100, Black Power button with Blue LED for AGS100T) 1x 3-pin DC-in terminal block for 9V-36V 1x Antenna hole for WLAN module
Left Panel External I/O	2x RS232/422/485 port for COM#1/COM#2 1x Antenna hole for WLAN module 1x Line-out (AGS100 for 2W mono speaker, AGS100T for stereo output)
Right Panel External I/O	1x SIM card slot
Expansion Slots	1x Full-size Mini PCI-E socket (USB 2.0 + PCI-E + SATA) 1x 2230 M.2 E-Key socket for WLAN & BT (USB 2.0 + PCI-E) 1x 3042 M.2 B-Key socket for WWAN & SSD (USB 2.0 + SATA)
Storage	1x mSATA socket (Mini-PCI-E) 1x 2242 M.2 B-Key socket for SSD
Construction	Aluminum & steel
Chassis Color	Silver & Gray
Mounting	DIN-rail mounting (DIN-rail mount kit included) Desktop or wall mounting (wall mount kit included)
Dimensions	160mm (W) x 110mm (D) x 44mm (H) 6.3" (W) x 4.33" (D) x 1.73" (H)
Weight	1kg
Operating Temperature	For E-series CPU: -40°C~70°C (-40°F~158°F) For N-series CPU: -20°C~60°C (-4°F~140°F)
Storage Temperature	-40°C ~ 85°C (-40°F~185°F)
Relative Humidity	5~90% @ 45°C, (non-condensing)
Vibration	Operatiing: 2.0 grms / 5~500Hz / random operation (with IEC 60068-2-64) Non-Operating: 3.0 grms / 5~500Hz / random operation (with IEC 60068-2-64)
Shock	Operating: 30G/11 ms Duration (with MIL-STD-810G) Non-operating: 40G/11 ms Duration (with MIL-STD-810G)
Certification	CE / LVD / FCC Class-B / CCC (AGS100 Only) / UL

Ordering Information

AGS100-I50/ AGS100T-I50	Fanless DIN-rail System supports TPM2.0 (AGS100T Series only) w/ Intel® Atom® Processor x7-E3950, 2x COM, 1x 4GB DDR3L industrial-grade memory, 1x 64GB MLC industrial-grade mSATA SSD, w/o power adaptor
AGS100-I40/ AGS100T-I40	Fanless DIN-rail System supports TPM2.0 (AGS100T Series only) w/ Intel® Atom® Processor x5-E3940, 2x COM, 1x 4GB DDR3L industrial-grade memory, 1x 64GB MLC industrial-grade mSATA SSD, w/o power adaptor
AGS100-I30/ AGS100T-I30	Fanless DIN-rail System supports TPM2.0 (AGS100T Series only) w/ Intel® Atom® Processor x5-E3930, 2x COM, 1x 4GB DDR3L industrial-grade memory, 1x 64GB MLC industrial-grade mSATA SSD, w/o power adaptor
AGS100-420/ AGS100T-420 (MOQ)	Fanless DIN-rail System supports TPM2.0 (AGS100T Series only) w/ Intel® Pentium® Processor N4200, 2x COM, 1x 4GB DDR3L industrial-grade memory, 1x 64GB MLC industrial-grade mSATA SSD, w/o power adaptor
AGS100-335/ AGS100T-335	Fanless DIN-rail System supports TPM2.0 (AGS100T Series only) w/ Intel® Celeron® Processor N3350, 2x COM, 1x 4GB DDR3L industrial-grade memory, 1x 64GB MLC (industrial-grade) mSATA SSD, w/o power adaptor
60W power adaptor (optional)	60W (12V@5A) power adaptor (bare wire type) Compatible with IEC62368-1/EN62368-1
Optional Accessories	WiFi/BT antenna kit, 4G/LTE antenna kit, GPS antenna kit

Remarks: 1. Specifications are subject to change without prior notice. 2. ODM/OEM is available. 3. For user's manual & datasheet download, visit www.ibase.com.tw.

AGS100/AGS100T

Intel® Entry Processor Ultra Low Power Reference Table

Processor Number	Intel® Pentium® Processors - 14 nm Apollo-Lake SoC Platform	Intel® Celeron® Processors - 14 nm Apollo-Lake SoC Platform	Intel® Atom® Processors - 14nm Apollo-Lake-I SoC Platform		
	N4200	N3350	x7-E3950	x5-E3940	x5-E3930
Base Freq (GHz)	1.1	1.1	1.6	1.6	1.3
Intel® Turbo Boost Technology 2.0 (GHz)	2.5	2.4	2.0	1.8	1.8
Last Level Cache	2M	2M	2M	2M	2M
Cores/Threads	4/4	2/2	4/4	4/4	2/2
Memory Speed (DDR3L)	1866	1600	1866	1866	1866
TDP	6W	6W	12W	9.5W	6.5W

Product View

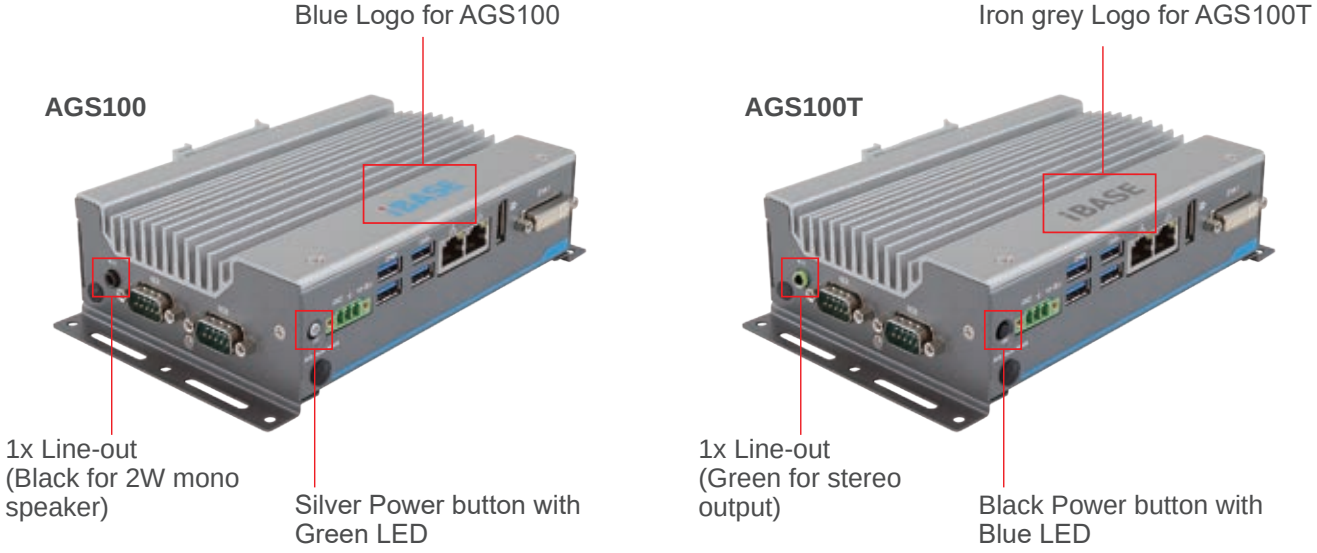

Dimensions and Drawing

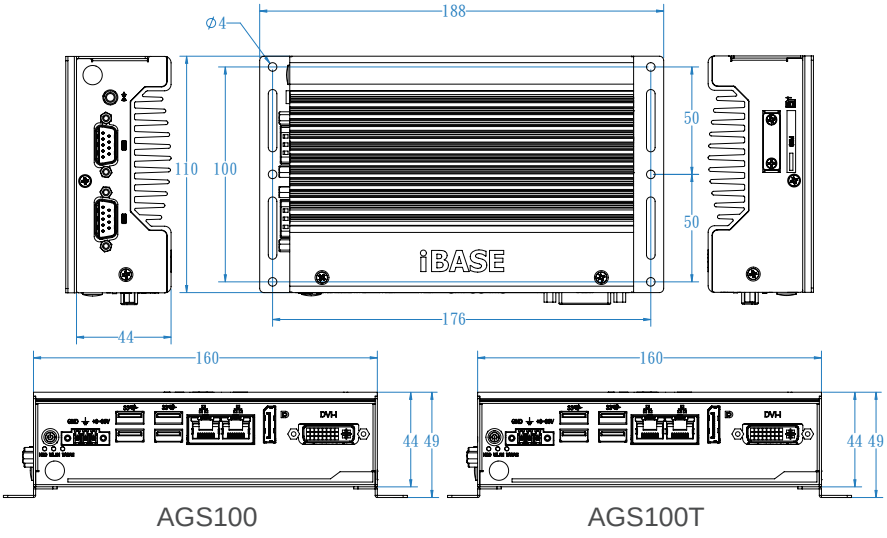

DIN-rail Mounting

AGS101T

Ultra-Compact IoT Gateway Fanless System

Intel® Atom® x6212RE/ x6414RE Processors

Rear I/O

Features

- Intel® Atom® x6212RE/ x6414RE Processors
- GPIO 4-in/4-out & 1x DVI-I & 1x HDMI
- Over/Under/Reverse voltage protection
- Extended operating operating temperature from -20°C to 70°C
- 9V~36V DC wide-range power input
- 1x M.2 B-Key 3052 supports 5G module
- 3x 2.5G Ethernet ports
- 2x RS232/422/485, 2x Fill-size Mini PCI-E, 2x USB3.1, 2x USB 2.0, 1x 2.5" SSD
- Supports DIN-rail mount, wall mount & TPM2.0

Specifications

System Mainboard	IB803T
CPU Type	Intel® Atom® x6414RE (1.5GHz, 1.5MB cache, 9W TDP) Intel® Atom® x6212RE (1.2GHz, 1.5MB cache, 6W TDP)
System Speed	Up to 1.5GHz
Memory	1x DDR4 SO-DIMM, Max. 16GB
Rear Panel External I/O	1x DVI-I + 1x DisplayPort connector 2x USB 3.1 ports, 2x USB 2.0 port 3x RJ45 2.5G Ethernet port 4x LED indicators (HDD, WLAN, WWAN) 1x Power button with Green LED 1x 3-pin DC-in terminal block for 9V-36V 1x Antenna hole for WLAN module 2x RS232 ports for COM#1/COM#2
Left Panel External I/O	2x RS232/422/485 ports for COM#1/COM#2 1x Antenna hole for WLAN module 1x Line-out
Right Panel External I/O	2x SIM card slot 1x Antenna hole for WLAN module
Expansion Slots	1x Full-size Mini PCI-E socket (USB 2.0) 1x Full-size Mini PCI-E socket (USB 2.0 + SATA) 1x M.2 B-Key socket (USB 3.0 + PCI-E)
Storage	1x mSATA socket (Mini-PCI-E) 1x 2.5" SSD
Construction	Aluminum & steel
Chassis Color	Silver & Gray
Mounting	DIN-rail mounting (DIN-rail mount kit included) Desktop or wall mounting (wall mount kit included)
Dimensions	218mm(W) x 110mm(D) x 52mm (H) w/ Wall-mount kit 8.58"(W) x 4.33mm(D) x 2.05mm (H)
Weight	TBD
Operating Temperature	-20°C~70°C (-4°F~158°F)
Storage Temperature	-40°C ~ 85°C (-40°F~185°F)

Relative Humidity	5~90% @ 60°C, (non-condensing)
Vibration	Operatiing: 2.0 grms / 5~500Hz / random operation (with IEC 60068-2-64)
Shock	Operating: 30G/11 ms Duration Non-operating: 40G/11 ms Duration
Certification	CE / FCC/ LVD

Ordering Information

AGS101T-6414RM	Fanless DIN-rail System supports TPM2.0 w/ Intel® Atom® Processor x6414RE, 3x 2.5G Ethernet port, 2x COM, w/o memory, storage, power adaptor
AGS101T-6212RM	Fanless DIN-rail System supports TPM2.0 w/ Intel® Atom® Processor x6212RE, 3x 2.5G Ethernet port, 2x COM, w/o memory, storage, power adaptor

Remarks: 1. Specifications are subject to change without prior notice. 2. ODM/OEM is available. 3. For user's manual & datasheet download, visit www.ibase.com.tw.

Product View

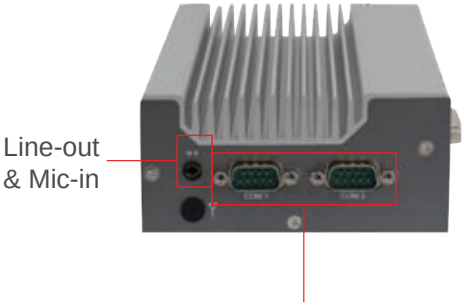

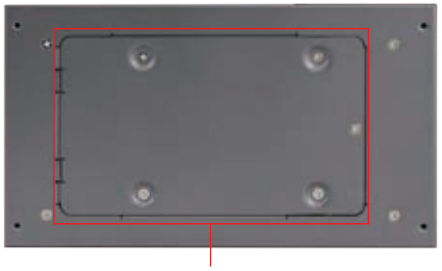

Dimensions and Drawing

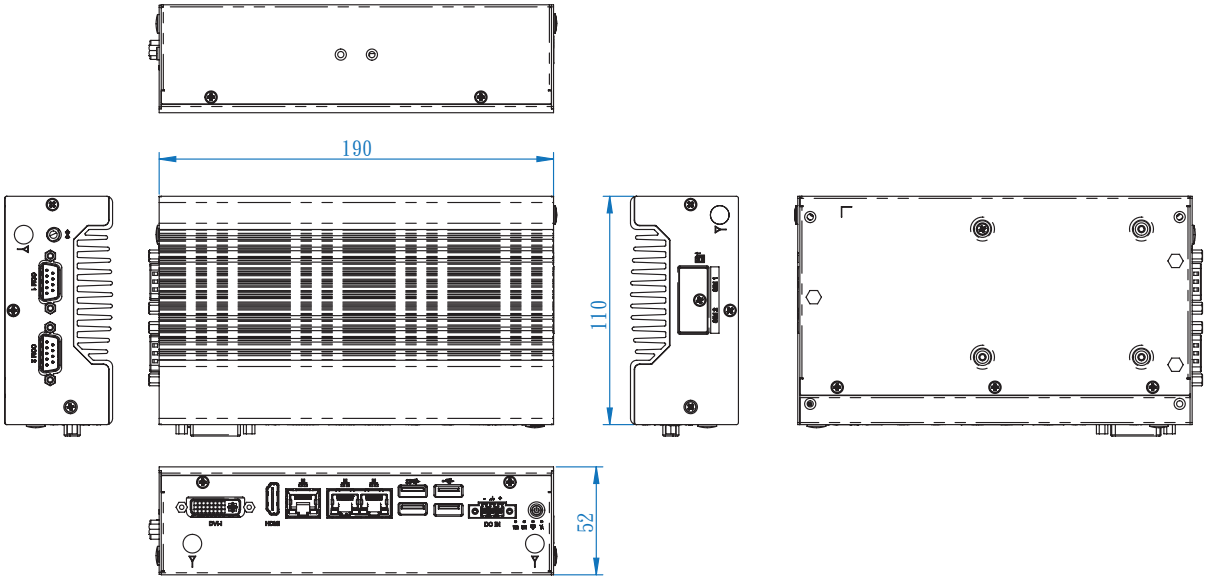

AGS102/AGS102T

Ultra-Compact IoT Gateway Fanless System

Intel® Atom® x7/x5, Pentium® & Celeron® Processors

Rear I/O

Features

- Intel® Atom® x7-E3950/x5-E3940/x5-E3930 & Pentium® N4200 / Celeron® N3350 Series Processors
- GPIO 4-in & 4-out with isolation function
- Over/Under/Reverse voltage protection
- Extended operating temperature from -40°C to 70°C
- 9V~36V DC wide-range power input
- Supports DIN-rail mount & wall mount
- Supports TPM2.0 (AGS102T Only)
- AGS102T: 4x RS232/422/485 serial ports
  AGS102: 2x RS232/422/485 and 2x RS232 serial ports
- Rugged and fanless design

Specifications

System Mainboard	IB801/ IB802T (F-1 Stepping)
CPU Type	Intel® Atom® x7-E3950/x5-E3940/x5-E3930 & Pentium® N4200/ Celeron® N3350 Series Processors
System Speed	Up to 2.5GHz
Memory	1x 4GB DDR3L-1866 SO-DIMM, Max. 8GB
Rear Panel External I/O	1x DVI-I + 1x DisplayPort connector 4x USB 3.0 ports, 1x USB 2.0 port 2x RJ45 Gigabit Ethernet port 3x LED indicators (HDD, WLAN, WWAN) 1x Power button with Green LED (Silver Power button with Green LED for AGS102, Black Power button with Blue LED for AGS102T) 1x 3-pin DC-in terminal block for 9V-36V 1x Antenna hole for WLAN module AGS102T: 2x RS232/422/485 ports for COM#3/COM#4 AGS102: 2x RS232 ports for COM#3/COM#4 1x 4-in & 4-out GPIO with isolation
Left Panel External I/O	2x RS232/422/485 ports for COM#1/COM#2 1x Antenna hole for WLAN module 1x Line-out (AGS102 for 2W mono speaker, AGS102T for stereo output)
Right Panel External I/O	1x SIM card slot
Expansion Slots	1x Full-size Mini PCI-E socket (USB 2.0 + PCI-E + SATA) 1x 2230 M.2 E-Key socket for WLAN & BT (USB 2.0 + PCI-E) 1x 3042 M.2 B-Key socket for WWAN & SSD (USB 2.0 + SATA)
Storage	1x mSATA socket (Mini-PCI-E) 1x 2242 M.2 B-Key socket for SSD
Construction	Aluminum & steel
Chassis Color	Silver & Gray
Mounting	DIN-rail mounting (DIN-rail mount kit included) Desktop or wall mounting (wall mount kit included)
Dimensions	160mm (W) x 110mm (D) x 44mm (H) 6.3" (W) x 4.33" (D) x 1.73" (H)
Weight	1kg
Operating Temperature	For E-series CPU: -40°C~70°C (-40°F~158°F) For N-series CPU: -20°C~60°C (-4°F~140°F)
Storage Temperature	-40°C ~ 85°C (-40°F~185°F)
Relative Humidity	5~90% @ 45°C, (non-condensing)
Vibration	Operatiing: 2.0 grms / 5~500Hz / random operation (with IEC 60068-2-64) Non-Operating: 3.0 grms / 5~500Hz / random operation (with IEC 60068-2-64)
Shock	Operating: 30G/11 ms Duration (with MIL-STD-810G) Non-operating: 40G/11 ms Duration (with MIL-STD-810G)
Certification	CE / LVD / FCC Class-B / CCC (AGS102 Only) / UL

Ordering Information

AGS102-I50/ AGS102T-I50	Fanless DIN-rail System supports TPM2.0 (AGS102T Series only) w/ Intel® Atom® Processor x7-E3950, 4x COM, 1x 4GB DDR3L industrial-grade memory, 1x 64GB MLC industrial-grade mSATA SSD, w/o power adaptor
AGS102-I40/ AGS102T-I40	Fanless DIN-rail System supports TPM2.0 (AGS102T Series only) w/ Intel® Atom® Processor x5-E3940, 4x COM, 1x 4GB DDR3L industrial-grade memory, 1x 64GB MLC industrial-grade mSATA SSD, w/o power adaptor
AGS102-I30/ AGS102T-I30	Fanless DIN-rail System supports TPM2.0 (AGS102T Series only) w/ Intel® Atom® Processor x5-E3930, 4x COM, 1x 4GB DDR3L industrial-grade memory, 1x 64GB MLC industrial-grade mSATA SSD, w/o power adaptor
AGS102-420/ AGS102T-420 (MOQ)	Fanless DIN-rail System supports TPM2.0 (AGS102T Series only) w/ Intel® Pentium® Processor N4200, 4x COM, 1x 4GB DDR3L industrial-grade memory, 1x 64GB MLC industrial-grade mSATA SSD, w/o power adaptor
AGS102-335/ AGS102T-335	Fanless DIN-rail System supports TPM2.0 (AGS102T Series only) w/ Intel® Celeron® Processor N3350, 4x COM, 1x 4GB DDR3L industrial-grade memory, 1x 64GB MLC industrial-grade mSATA SSD, w/o power adaptor
60W power adaptor (optional)	60W (12V@5A) power adaptor, bare wire type Compatible with IEC62368-1/EN62368-1
Optional Accessories	WiFi/BT antenna kit, 4G/LTE antenna kit, GPS antenna kit

Remarks: 1. Specifications are subject to change without prior notice. 2. ODM/OEM is available. 3. For user's manual & datasheet download, visit www.ibase.com.tw.

AGS102/AGS102T

Intel® Entry Processor Ultra Low Power Reference Table

Processor Number	Intel® Pentium® Processors - 14 nm Apollo-Lake SoC Platform	Intel® Celeron® Processors - 14 nm Apollo-Lake SoC Platform	Intel® Atom® Processors - 14nm Apollo-Lake-I SoC Platform		
	N4200	N3350	x7-E3950	x5-E3940	x5-E3930
Base Freq (GHz)	1.1	1.1	1.6	1.6	1.3
Intel® Turbo Boost Technology 2.0 (GHz)	2.5	2.4	2.0	1.8	1.8
Last Level Cache	2M	2M	2M	2M	2M
Cores/Threads	4/4	2/2	4/4	4/4	2/2
Memory Speed (DDR3L)	1866	1600	1866	1866	1866
TDP	6W	6W	12W	9.5W	6.5W

Product View

AGS102

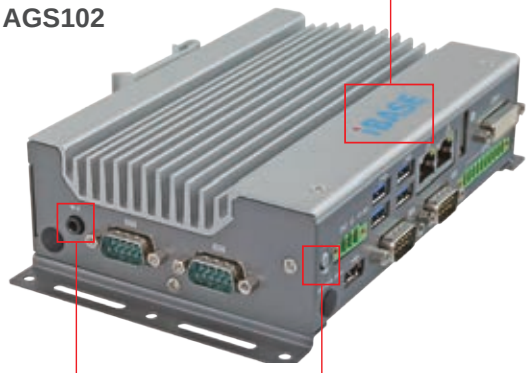

AGS102T

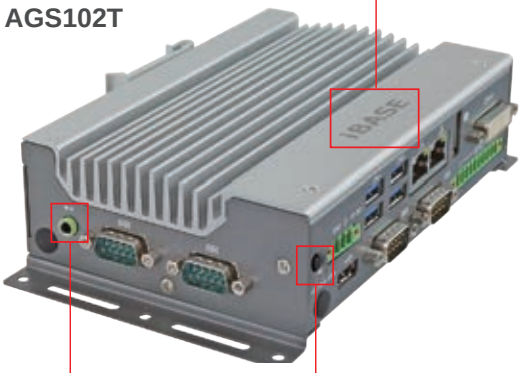

Dimensions and Drawing

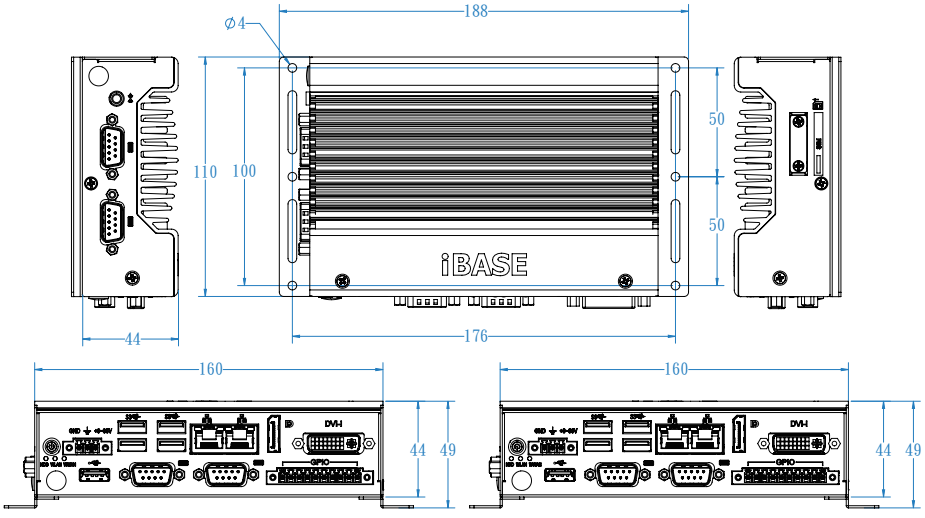

AGS102 AGS102T

DIN-rail Mounting

AGS103T

Compact IoT Gateway Fanless System

Intel® Atom® x6414RE/x6212RE Processors

Rear I/O

Features

- Intel® Atom® x6414RE/x6212RE Processors (formerly Elkhart Lake)
- GPIO 4-in/4-out & 1x DVI-I & 1x HDMI
- Over/Under/Reverse voltage protection
- Extended operating temperature from -20°C to 70°C
- 9V~36V DC wide-range power input
- 1x M.2 B-Key 3052 support 5G module
- Optional 1x 2.5" SSD (AGS103TS)
- 3x 2.5G Ethernet ports
- 2x full-size Mini PCI-E
- 4x COM (RS232/422/485), 2x USB 3.1 & 2x USB 2.0
- Supports DIN-rail mount, wall mount & TPM 2.0

Specifications

System Mainboard	IB803T
CPU Type	Intel® Atom® x6414RE (1.5GHz, 1.5MB cache, 9W TDP) Intel® Atom® x6212RE (1.2GHz, 1.5MB cache, 6W TDP)
System Speed	Up to 1.5GHz
Memory	1x DDR4 SO-DIMM , Max. 16GB
Rear Panel External I/O	1x DVI-I + 1x HDMI 2x USB 3.1 ports, 2x USB 2.0 port 3x RJ45 2.5G Ethernet port 4x LED indicators (GPIO, WLAN, WWAN) 1x Power button with Green LED 1x 3-pin DC-in terminal block for 9V-36V 2x Antenna hole for WLAN module 2x RS232/422/485 ports for COM#3/COM#4 1x 4-in & 4-out GPIO
Left Panel External I/O	2x RS232/422/485 ports for COM#1/COM#2 1x Antenna hole for WLAN module 1x Line-out/ Mic-in
Right Panel External I/O	2x SIM card slot 1x Antenna hole for WLAN module
Expansion Slots	1x Full-size Mini PCI-E socket (USB 2.0) 1x Full-size Mini PCI-E socket (USB 2.0 + SATA) 1x M.2 B-Key socket (USB 3.0 + PCI-E)
Storage	1x Mini PCI-E slot (mSATA SSD),1x 2.5" SSD (AGS103TS)
Construction	Aluminum & steel
Chassis Color	Silver & Gray
Mounting	DIN-rail mounting (DIN-rail mount kit included) Desktop or wall mounting (wall mount kit included)
Dimensions	AGS103T : 190mm(W) x 110mm(D) x 52mm (H) 7.48"(W) x 4.33"(D) x 2.05"(H) AGS103TS : 190mm(W) x 110mm(D) x 73mm (H) 7.48"(W) x 4.33"(D) x 2.87"(H)
Weight	1.2kg
Operating Temperature	-20°C~70°C (-4°F~158°F)
Storage Temperature	-40°C ~ 85°C (-40°F~185°F)
Relative Humidity	5~90% @ 60°C, (non-condensing)
Vibration	Operating: 2.0 Grms / 5~500Hz / random operation (with IEC 60068-2-64)
Shock	Operating: 30G/11 ms Duration Non-operating: 40G/11 ms Duration
Certification	CE/ FCC/ LVD
Operating Systems	Win10 and Linux Ubuntu

Ordering Information

AGS103T-6414RM	Fanless DIN-rail System supports TPM2.0 w/ Intel® Atom® Processor x6414RE, 3x 2.5G Ethernet port, 4x COM, w/o memory, storage, power adaptor
AGS103TS-6414RM	Fanless DIN-rail System supports TPM2.0 w/ Intel® Atom® Processor x6414RE, 3x 2.5G Ethernet port, 4x COM, w/o memory, storage, power adaptor, w/ 2.5" storage slot
AGS103T-6212RM	Fanless DIN-rail System supports TPM2.0 w/ Intel® Atom® Processor x6212RE, 3x 2.5G Ethernet port, 4x COM, w/o memory, storage, power adaptor
AGS103TS-6212RM	Fanless DIN-rail System supports TPM2.0 w/ Intel® Atom® Processor x6212RE, 3x 2.5G Ethernet port, 4x COM, w/o memory, storage, power adaptor, w/ 2.5" storage slot

Remarks: 1. Specifications are subject to change without prior notice. 2. ODM/OEM is available. 3. For user's manual & datasheet download, visit www.ibase.com.tw.

AGS103T

Product View

AGS103T

SIM card Slot

AGS103TS

2.5” Storage Slot

Line-out
& Mic-in

COM1 & COM2

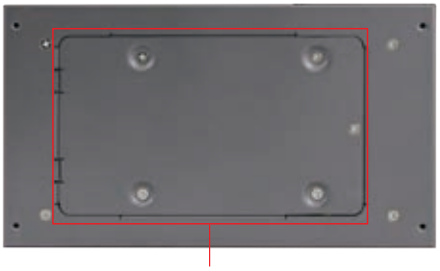

Easily Accessible Storage Device

Dimensions and Drawing

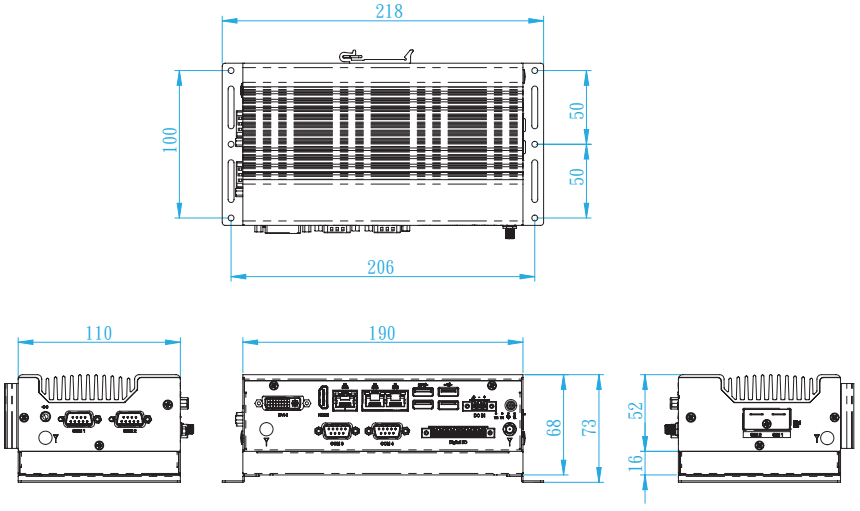

DIN-rail Mounting

AMS210

Automatic Control System
9th/8th Gen Intel® Core™ Processor

Rear I/O

Features

- 9th/8th Gen Intel® Core™ Processor (35W TDP)
- 2x DDR4 SO-DIMM, Max. 32GB
- 4x Gigabit LAN
- 512k SRAM on board
- 2x expansion slots
- 3x DisplayPort outputs
- 2.5" drive bays (supports RAID 0/1)

MB211

Specifications

System Mainboard	Customized board
CPU Type	9th/8th Gen Intel® Core™ Processor
System Speed	Up to 4.0GHz
Memory	2x 4GB DDR4-2666/2400 SO-DIMM
Front Panel External I/O	2x RS232 (Optional COM port cable)
Rear Panel External I/O	1x RS232/RS422/RS485 1x RS232 (Optional COM port cable kit) 1x Power On/Off switch 3x DisplayPort (1x DP via pin-header) 4x USB 2.0 4x RJ45 (Gigabit Ethernet) 4x USB 3.1 1x Line-Out 1x DC input (3-pin Phoenix connector with lock)
Expansion Slots	ABP-IP701: 1x PCI-E(x16) + 1x PCI-E(x4) ABP-IP702: 1x PCI + 1x PCI-E(x16) ABP-IP703: 2x PCI
Storage	2x 2.5" SATA HDD or SSD (Optional 2nd drive bay bracket)
Construction	SGCC
Chassis Color	Silver
Mounting	Desktop or wall mount
Dimensions	297.4mm (W) x 266.2mm(D) x 78.5mm (H) 11.71" (W) x 10.48" (D) x 3.09" (H)
Weight	5.9kg
Operating Temperature	0°C~55°C (32°F~131°F)
Storage Temperature	-20°C~80°C (-4°F~176°F)
Relative Humidity	10~95%, non-condensing@60 degree C
Vibration	Operating: 3Grms / 5~500Hz
Shock	Operating: 20 g / 11 ms Non-operating: 40 g / 11 ms
Certification	CE/FCC Class-B/ LVDS (Prescan only)

Ordering Information

AMS210	Box PC Controller with Intel® Core™ i7-9700TE Processor CPU with 8GB DDR4 SO-DIMM, 2.5" 500GB SATA HDD/SSD and 1x PCI + 1x PCI-E(x16) expansion slots
AMS210M	Box PC Controller MB211 w/o CPU / memory/ HDD / riser card / power adaptor, desktop stand & mounting brackets (RoHS2)
270W Power Adaptor Kit (optional)	270W (24V@11.25A) power kit compatible with IEC62368-1/EN62368-1

Remarks: 1. Specifications are subject to change without prior notice. 2. ODM/OEM is available. 3. For user's manual & datasheet download, visit www.ibase.com.tw.

AMS210

Recommended Processor List

Model	TDP	Base Freq	Turbo Freq	Cache	Cores / Threads
i7-9700TE	35W	1.8 GHz	3.8 GHz	12M	8/8
i7-8700T	35W	2.4 GHz	4.0 GHz	12M	6/12
i5-9500TE	35W	2.2 GHz	3.6 GHz	9M	6/6
i5-8500T	35W	2.1 GHz	3.5 GHz	9M	6/6
i3-9100TE	35W	2.2 GHz	3.2 GHz	6M	4/4
i3-8100T	35W	3.1 GHz	N/A	6M	4/4
G5400T	35W	3.1 GHz	N/A	4M	2/4
G4900T	35W	2.9 GHz	N/A	2M	2/2

Inside view of the system

MB211 Digital IO

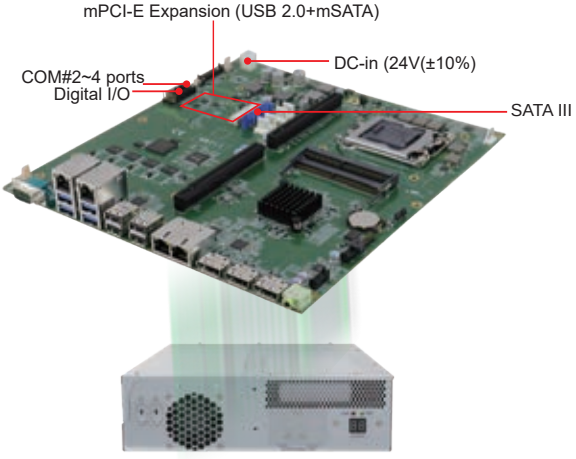

Dimensions and Drawing

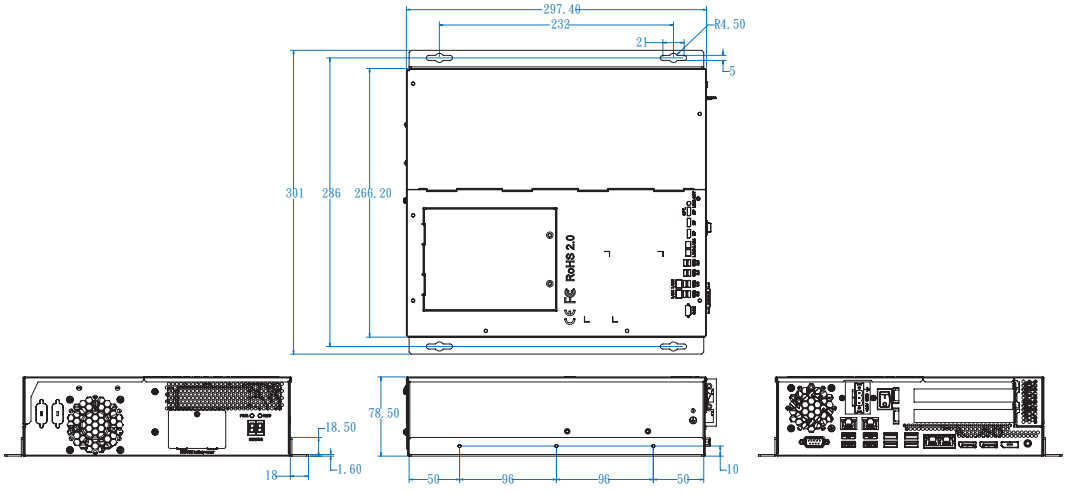

AMS300

Compact Expandable Fanless System

7th/6th Gen Intel® Core™ i7/i5/i3 Desktop Processors (35W TDP)

Rear I/O

Features

- Compact fanless system with IBASE MB300 customized board
- 7th/6th Gen Intel® Core™ i7/i5/i3 Processors (35W TDP)
- 2MB MRAM module (optional)
- Front removable drive bay for HDD/SSD (supports RAID 0/1)
- Over/Under/Reverse voltage protection
- iSMART, iAMT (11.6)

Specifications

System Mainboard	MB300 with Intel® Q170 PCH
CPU Type	7th/6th Gen Intel® Core™ i7/i5/i3 desktop processors (35W TDP)
System Speed	Up to 3.4GHz
Memory	2x DDR4-2133 SO-DIMM, Max. 32GB
Front Panel External I/O	2x Antenna hole for WLAN module
Rear Panel External I/O	1x DVI-I + 1x DisplayPort connector 1x Audio jack for Line-out 4x USB 3.0 ports, 2x USB 2.0 ports 1x Red HDD LED, 1x green power LED 2x Error LED by programming 1x Power button 1x 2-pin terminal block for external power button 1x RS232/422/485 port for COM#1 1x RS232 port for COM#2 2x RJ45 Gigabit Ethernet port 1x 3-pin DC-in terminal block for 24V(±10%)
Expansion Slots	1x Mini PCI-E socket (full-size)
Storage	2x 2.5" HDD/SSD (1x internal & 1x external-accessible) + 1x mSATA socket
Construction	Aluminum & steel
Chassis Color	Silver & Gray
Mounting	Desktop or wall mounting (wall mount kit included) Side mounting DIN-rail mounting (optional)
Dimensions	275mm (W) x 140mm (D) x 70mm (H) 10.83" (W) x 5.51" (D) x 2.76" (H)
Weight	2.7kg
Operating Temperature	-10°C to 60°C (14°F~140°F) *with air flow -10°C to 50°C (14°F to 122°F) without air flow
Storage Temperature	-20°C to 80°C (-4°F to 176°F)
Relative Humidity	5~90% @ 45°C, (non-condensing)
Vibration	Operating: 3 grms / 5~500Hz / random operation (storage is mSATA)
Shock	Operating: 20 g / 11 ms Non-operating: 40 g / 11 ms
Certification	CE / LVD / FCC Class-B

Ordering Information

AMS300	Fanless System with MB300, w/ Intel® Core™ i7/i5/i3 desktop Processor, 2x COM, 2x 4GB memory, 1x 2.5" 64GB MLC industrial-grade SSD, w/o power adaptor
180W power adaptor (optional)	180W (24V @7.5A) power adaptor, bare wire type Compatible with IEC62368-1/EN62368-1
2nd storage ACC Kit (optional)	Storage ACC Kit including screws and cable (SC2AMS300--A10100R)
Optional Accessories	WiFi/BT antenna kit 4G/LTE antenna kit (Must have M2MU2-S) GPS antenna kit (Must have M2MU2-S)

Recommended Processor List

Model	TDP	Base Freq	Turbo Freq	Cache	Cores / Threads
i7-7700T	35W	2.9 GHz	3.8 GHz	8M	4/8
i7-6700TE	35W	2.4 GHz	3.4 GHz	8M	4/8
i5-7500T	35W	2.7 GHz	3.3 GHz	6M	4/4
i5-6500TE	35W	2.3 GHz	3.3 GHz	6M	4/4
i3-7101TE	35W	3.4 GHz	N/A	3M	2/4
i3-6100TE	35W	2.7 GHz	N/A	4M	2/4
G4400TE	35W	2.9 GHz	N/A	3M	2/2
G3900TE	35W	2.6 GHz	N/A	2M	2/2

Remarks: 1. Specifications are subject to change without prior notice. 2. ODM/OEM is available. 3. For user's manual & datasheet download, visit www.ibase.com.tw.

AMS300

Features of New Automation Box PC

- Based on 7th/6th Gen Intel® CPU (35W TDP)
- Compact & Fanless
- Onboard Diagnostics LED
- Supports Different Types of Fieldbus Through Expansion (AMS301)
- 2MB MRAM (optional)
- Front-accessible Drive Bay (supports RAID 0/1)
- Remote Power Button for Remote Access
- 24V Input Voltage (Power Protection)
- Wallmount, Desktop or DIN-Rail Mounting

Flexible Mounting

Side Mounting

DIN-rail Mounting

Dimensions and Drawing

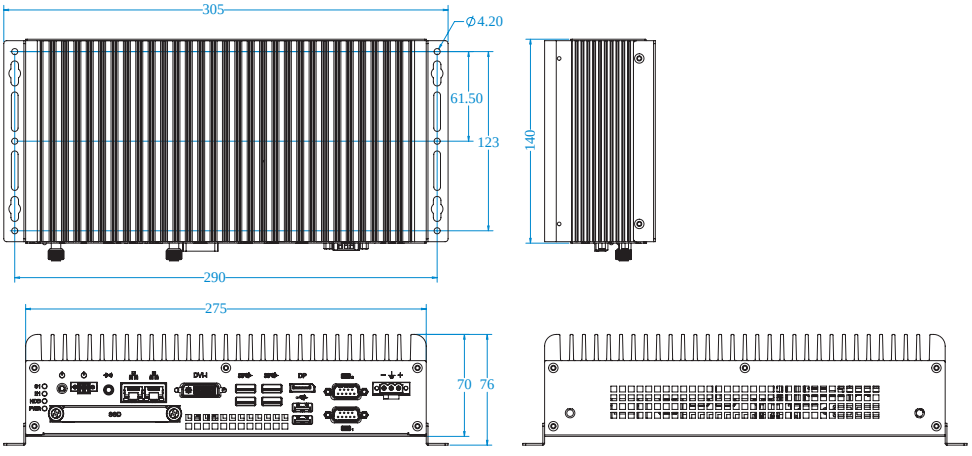

AMS300-1

Compact Expandable Fanless System

7th/6th Gen Intel® Core™ i7/i5/i3 Desktop Processors (35W TDP)

Rear I/O

Features

- Compact fanless system with IBASE MB300-1 customized board
- 7th/6th Gen Intel® Core™ i7/i5/i3 Processors (35W TDP)
- 2MB MRAM module (optional)
- Front removable drive bay for HDD/SSD (supports RAID 0/1)
- Over/Under/Reverse voltage protection
- iSMART, iAMT (11.6)

Specifications

System Mainboard	MB300-1 with Intel® Q170 PCH
CPU Type	7th/6th Gen Intel® Core™ i7/i5/i3 desktop processors (35W TDP)
System Speed	Up to 3.4GHz
Memory	2x DDR4-2133 SO-DIMM, Max. 32GB
Front Panel External I/O	2x Antenna hole for WLAN module
Rear Panel External I/O	1x DVI-I + 1x DisplayPort connector 1x Audio jack for Line-out 4x USB 3.0 ports, 2x USB 2.0 ports 1x Red HDD LED, 1x green power LED 2x Error LED by programming 1x Power button 1x 2-pin terminal block for external power button 3x RJ45 Gigabit Ethernet port 1x 3-pin DC-in terminal block for 24V(±10%)
Expansion Slots	1x Mini PCI-E socket (full-size)
Storage	2x 2.5" HDD/SSD (1x internal & 1x external-accessible) + 1x mSATA socket
Construction	Aluminum & steel
Chassis Color	Silver & Gray
Mounting	Desktop or wall mounting (wall mount kit included) Side mounting DIN-rail mounting (optional)
Dimensions	275mm (W) x 140mm (D) x 70mm (H) 10.83" (W) x 5.51" (D) x 2.76" (H)
Weight	2.7kg
Operating Temperature	-10°C to 60°C (14°F~140°F) *with air flow -10°C to 50°C (14°F to 122°F) without air flow
Storage Temperature	-20°C to 80°C (-4°F to 176°F)
Relative Humidity	5~90% @ 45°C, (non-condensing)
Vibration	Operating: 3 grms / 5~500Hz / random operation (storage is mSATA)
Shock	Operating: 20 g / 11 ms Non-operating: 40 g / 11 ms
Certification	CE / LVD / FCC Class-B (Prescan only)

Ordering Information

AMS300-1	Fanless System with MB300-1, w/ Intel® Core™ i7/i5/i3 desktop Processor, 3x RJ45, 2x 4GB memory, 1x 2.5" 64GB MLC industrial-grade SSD, w/o power adaptor
180W power adaptor (optional)	180W (24V @7.5A) power adaptor, bare wire type Compatible with IEC62368-1/EN62368-1
2nd storage ACC Kit (optional)	Storage ACC Kit including screws and cable (SC2AMS300--A10100R)
Optional Accessories	WiFi/BT antenna kit 4G/LTE antenna kit (Must have M2MU2-S) GPS antenna kit (Must have M2MU2-S)

Recommended Processor List

Model	TDP	Base Freq	Turbo Freq	Cache	Cores / Threads
i7-7700T	35W	2.9 GHz	3.8 GHz	8M	4/8
i7-6700TE	35W	2.4 GHz	3.4 GHz	8M	4/8
i5-7500T	35W	2.7 GHz	3.3 GHz	6M	4/4
i5-6500TE	35W	2.3 GHz	3.3 GHz	6M	4/4
i3-7101TE	35W	3.4 GHz	N/A	3M	2/4
i3-6100TE	35W	2.7 GHz	N/A	4M	2/4
G4400TE	35W	2.9 GHz	N/A	3M	2/2
G3900TE	35W	2.6 GHz	N/A	2M	2/2

Remarks: 1. Specifications are subject to change without prior notice. 2. ODM/OEM is available. 3. For user's manual & datasheet download, visit www.ibase.com.tw.

AMS300-1

Product View

AMS300 VS AMS300-1

COM#1
COM#2

3rd LAN

Flexible Mounting

Side Mounting

DIN-rail Mounting

Dimensions and Drawing

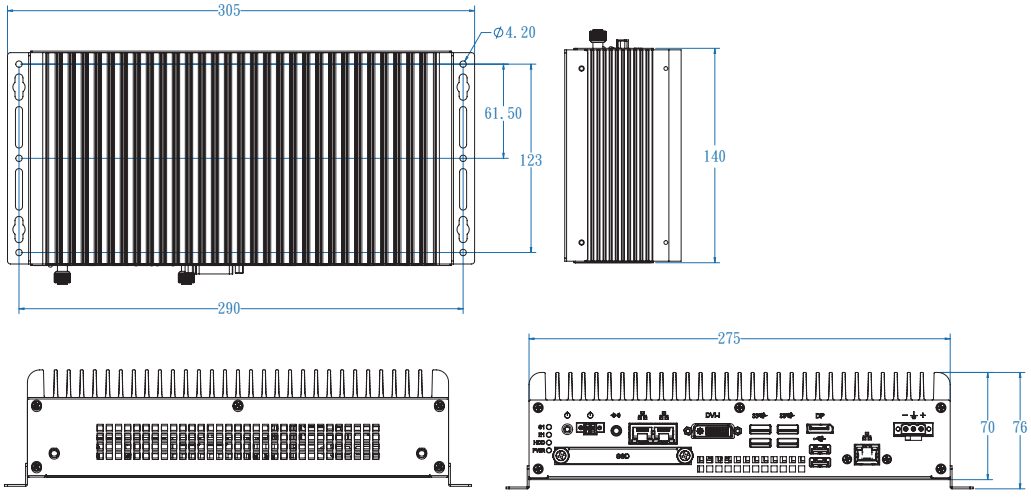

AMS301

Compact Expandable Fanless System

7th/6th Gen Intel® Core™ i7/i5/i3 Desktop Processors (35W TDP)

Rear I/O

Features

- Compact fanless system with IBASE MB300 customized board
- 7th/6th Gen Intel® Core™ i7/i5/i3 Processors (35W TDP)
- 2MB MRAM module (optional)
- Front removable drive bay for HDD/SSD (supports RAID 0/1)
- Supports different types of Fieldbus through expansion slot
- Over/Under/Reverse voltage protection
- Supports DIN-rail mount & wall mount
- iSMART, iAMT (11.6)

Specifications

System Mainboard	MB300 with Intel® Q170 PCH
CPU Type	7th/6th Gen Intel® Core™ i7/i5/i3 desktop processors (35W TDP)
System Speed	Up to 3.4GHz
Memory	2x DDR4-2133 SO-DIMM, Max. 32GB
Front Panel External I/O	2x Antenna hole for WLAN module
Rear Panel External I/O	1x DVI-I + 1x DisplayPort 1x Audio jack for Line-out 4x USB 3.0 ports, 2x USB 2.0 ports 1x Red HDD LED, 1x green power LED 2x Error LED by programming 1x Power button 1x 2-pin terminal block for external power button 1x RS232/422/485 port for COM#1 1x RS232 port for COM#2 2x RJ45 Gigabit Ethernet port 1x 3-pin DC-in terminal block for 24V (±10%) 3x Fieldbus module bracket
Expansion Slots	4x Mini PCI-E sockets (full-size)
Storage	2x 2.5" HDD/SSD (1x internal & 1x external-accessible) + 1x mSATA socket
Construction	Aluminum & steel
Chassis Color	Silver & Gray
Mounting	Desktop or wall mounting (wall mount kit included) Side mounting DIN-rail mounting (optional)
Dimensions	275mm (W) x 140mm (D) x 117mm (H) 10.83" (W) x 5.51" (D) x 4.61" (H)
Weight	3.3kg
Operating Temperature	-10°C to 60°C (14°F~140°F) *with air flow -10°C to 50°C (14°F to 122°F) without air flow
Storage Temperature	-20°C to 80°C (-4°F to 176°F)
Relative Humidity	5~90% @ 45°C, (non-condensing)
Vibration	Non-Operating: 1.0 grms / 5~500Hz / random operation Operatiing: 0.25 grms / 5~500Hz / random operation
Shock	Operating: 20 g / 11 ms Non-operating: 40 g / 11 ms
Certification	CE / LVD / FCC Class-B

Ordering Information

AMS301	Fanless System with MB300, w/ Intel® Core™ i7/i5/i3 desktop Processor, 2x COM, 2x 4GB memory, 1x 2.5" 64GB MLC industrial-grade SSD, 3x Mini PCI-E, w/o power adaptor
180W power adaptor (optional)	180W (24V @7.5A) power adaptor, bare wire type Compatible with IEC62368-1/EN62368-1
2nd storage ACC Kit (optional)	Storage ACC Kit including screws and cable (SC2AMS300--A10100R)
Optional Accessories	WiFi/BT antenna kit 4G/LTE antenna kit (Must have M2MU2-S) GPS antenna kit (Must have M2MU2-S)

Recommended Processor List

Model	TDP	Base Freq	Turbo Freq	Cache	Cores / Threads
i7-7700T	35W	2.9 GHz	3.8 GHz	8M	4/8
i7-6700TE	35W	2.4 GHz	3.4 GHz	8M	4/8
i5-7500T	35W	2.7 GHz	3.3 GHz	6M	4/4
i5-6500TE	35W	2.3 GHz	3.3 GHz	6M	4/4
i3-7101TE	35W	3.4 GHz	N/A	3M	2/4
i3-6100TE	35W	2.7 GHz	N/A	4M	2/4
G4400TE	35W	2.9 GHz	N/A	3M	2/2
G3900TE	35W	2.6 GHz	N/A	2M	2/2

Remarks: 1. Specifications are subject to change without prior notice. 2. ODM/OEM is available. 3. For user's manual & datasheet download, visit www.ibase.com.tw.

Expansion Cards

IP301

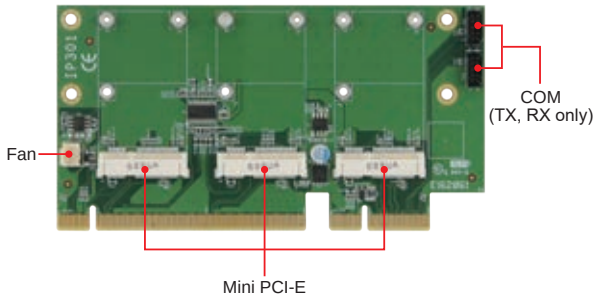

Flexible Mounting

Side Mounting

DIN-rail Mounting

Field Bus Adaptor via Mini PCI-E

PROFINET module

PROFIBUS module

Dimensions and Drawing

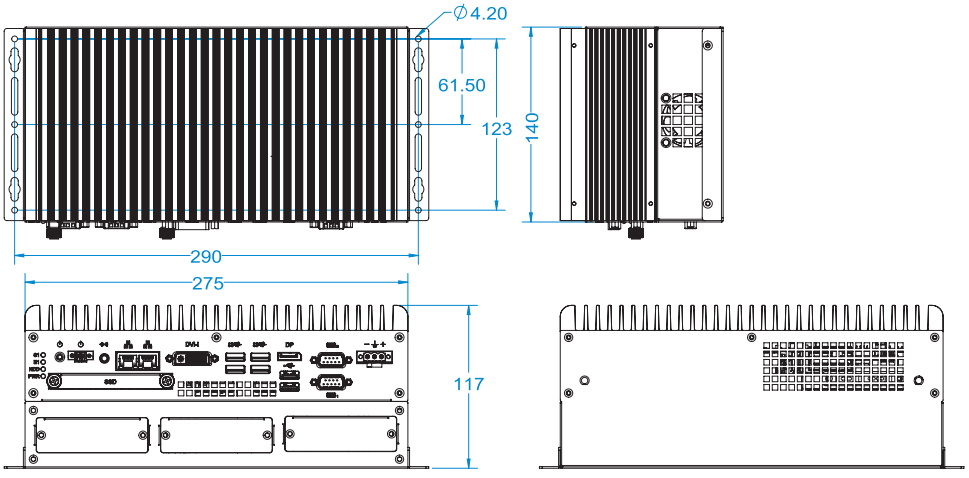

AMS302

Compact Expandable Fanless System

7th/6th Gen Intel® Core™ i7/i5/i3 Desktop Processors (35W TDP)

Rear I/O

Features

- Compact fanless system with for IBASE MB300 customized board
- 7th/6th Gen Intel® Core™ i7/i5/i3 Processors (35W TDP)
- 2MB MRAM module (optional)
- Front removable drive bay for HDD/SSD (supports RAID 0/1)
- 1x PCI-E (x8) + 1x PCI-E (x4) expansion slot
- Over/Under/Reverse voltage protection
- Supports DIN-rail mount & wall mount
- iSMART, iAMT (11.6)

Specifications

System Mainboard	MB300 with Intel® Q170 PCH
CPU Type	7th/6th Gen Intel® Core™ i7/i5/i3 desktop processors (35W TDP)
System Speed	Up to 3.4GHz
Memory	2x DDR4-2133 SO-DIMM, Max. 32GB
Front Panel External I/O	2x Antenna hole for WLAN module
Rear Panel External I/O	1x DVI-I + 1x DisplayPort connector 1x Audio jack for Line-out 4x USB 3.0 ports, 2x USB 2.0 ports 1x Red HDD LED, 1x green power LED 2x Error LED by programming 1x Power button 1x 2-pin terminal block for external power button 1x RS232/422/485 port for COM#1 1x RS232 port for COM#2 2x RJ45 Gigabit Ethernet port 1x 3-pin DC-in terminal block for 24V (±10%)
Expansion Slots	1x Mini PCI-E sockets (full-size) 1x PCI-E (x8) slot 1x PCI-E (x4) slot
Storage	2x 2.5" HDD/SSD (1x internal & 1x external-accessible) + 1x mSATA socket
Construction	Aluminum & steel
Chassis Color	Silver & Gray
Mounting	Desktop or wall mounting (wall mount kit included) Side mounting DIN-rail mounting (optional)
Dimensions	275mm (W) x 140mm (D) x 117mm (H) 10.83" (W) x 5.51" (D) x 4.61" (H)
Weight	3.3kg
Operating Temperature	-10°C to 60°C (14°F~140°F) *with air flow -10°C to 50°C (14°F to 122°F) without air flow
Storage Temperature	-20°C to 80°C (-4°F to 176°F)
Relative Humidity	5~90% @ 45°C, (non-condensing)
Vibration	Non-Operating: 1.0 grms / 5~500Hz / random operation Operatiing:0.25 grms / 5~500Hz / random operation
Shock	Operating: 20 g / 11 ms Non-operating: 40 g / 11 ms
Certification	CE / LVD / FCC Class-B

Ordering Information

AMS302	Fanless System with MB300, w/ Intel® Core™ i7/i5/i3 desktop Processor, 2x COM, 2x 4GB memory, 1x 2.5" 64GB MLC industrial-grade SSD, 1x PCI-E (x8) + 1x PCI-E (x4) expansion slots, w/o power adaptor
180W power adaptor (optional)	180W (24V @7.5A) power adaptor, bare wire type Compatible with IEC62368-1/EN62368-1
2nd storage ACC Kit (optional)	Storage ACC Kit including screws and cable (SC2AMS300--A10100R)
Optional Accessories	WiFi/BT antenna kit 4G/LTE antenna kit (Must have M2MU2-S) GPS antenna kit (Must have M2MU2-S)

Recommended Processor List

Model	TDP	Base Freq	Turbo Freq	Cache	Cores / Threads
i7-7700T	35W	2.9 GHz	3.8 GHz	8M	4/8
i7-6700TE	35W	2.4 GHz	3.4 GHz	8M	4/8
i5-7500T	35W	2.7 GHz	3.3 GHz	6M	4/4
i5-6500TE	35W	2.3 GHz	3.3 GHz	6M	4/4
i3-7101TE	35W	3.4 GHz	N/A	3M	2/4
i3-6100TE	35W	2.7 GHz	N/A	4M	2/4
G4400TE	35W	2.9 GHz	N/A	3M	2/2
G3900TE	35W	2.6 GHz	N/A	2M	2/2

Remarks: 1. Specifications are subject to change without prior notice. 2. ODM/OEM is available. 3. For user's manual & datasheet download, visit www.ibase.com.tw.

AMS302

Expansion Cards

IP302

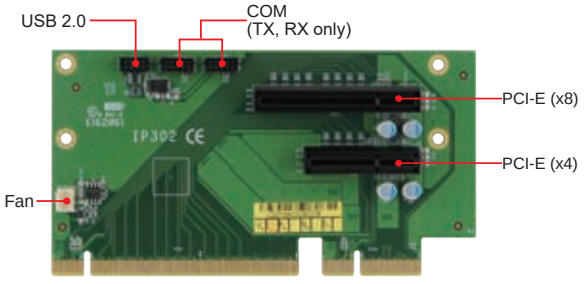

Flexible Mounting

Side Mounting

DIN-rail Mounting

Dimensions and Drawing

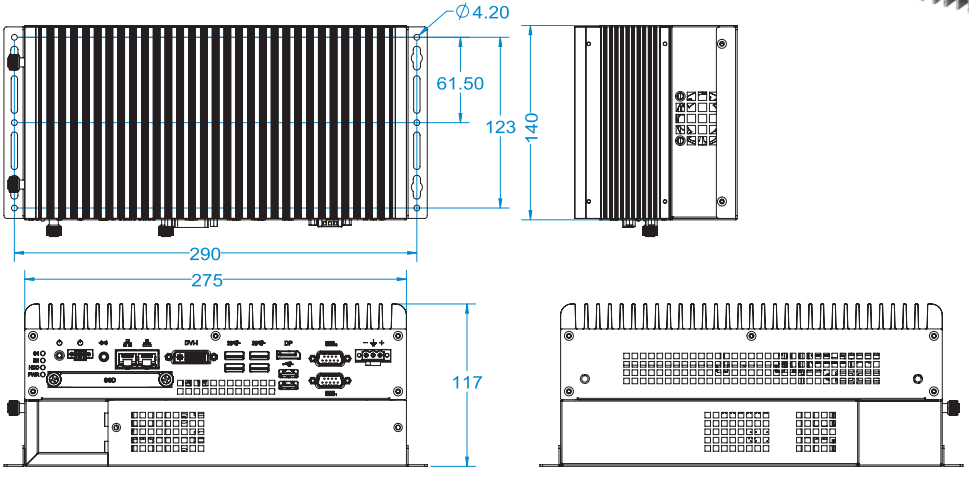

AMS310

Compact Expandable Fanless System

10th Gen Intel® Core™ i7/i5/i3 Desktop Processors (35W TDP)

Rear I/O

Features

- Compact fanless system with for IBASE MB310 customized board
- 10th Gen Intel® Core™ i7/i5/i3 Processors (35W TDP)
- Front removable drive bay for HDD/SSD
- 2x COM, 6x USB, 2x 2.5G LAN, 1x HDMI, 2x DisplayPort
- Over/Under/Reverse voltage protection
- Supports DIN-rail mount & wall mount
- TPM 2.0

Specifications

System Mainboard	MB310 with Intel® Q470E PCH
CPU Type	10th Gen Intel® Core™ i7/i5/i3 desktop Processors (35W TDP)
System Speed	Up to 4.5GHz
Memory	2x DDR4-2933/2666 SO-DIMM, Max. 64GB
Front Panel External I/O	6x Antenna hole for WLAN/4G/5G module
Rear Panel External I/O	1x HDMI connector 2x DisplayPort connector 1x Audio jack for Line-out 4x USB 3.0, 2x USB 2.0 ports (1x software programmable) 1x Red HDD LED, 1x green power LED, 2x Error LED by programming 1x 2-pins terminal block connector for remote access 1x Power button 1x RS232/422/485 port for COM#1 1x RS232 port for COM#2 2x RJ45 2.5G Ethernet port 1x 3-pin DC-in terminal block for 24V(±10%)
Expansion Slots	1x M.2 2042 E-key (USB 2.0 & PCI-E) 1x M.2 3052 B-key (USB 3.0 & PCI-E)
Storage	1x 2.5" HDD/SSD (external-accessible) 1x M.2 2080 M-key (SATA & PCI-E)
Construction	Aluminum & steel
Chassis Color	Silver & Gray
Mounting	Desktop or wall mounting (wall mount kit included) Side mounting DIN-rail mounting (optional)
Dimensions	275mm (W) x 150mm (D) x 70mm (H) 10.83" (W) x 5.91" (D) x 2.76" (H)
Weight	2.75kg
Operating Temperature	-10°C to 60°C (14°F~140°F) *with air flow -10°C to 50°C (14°F to 122°F) without air flow
Storage Temperature	-20°C to 80°C (-4°F to 176°F)
Relative Humidity	5~90% @ 45°C, (non-condensing)
Vibration	Non-Operating: 1.0 grms / 5~500Hz / random operation Operatiing:0.25 grms / 5~500Hz / random operation
Shock	Operating: 20 g / 11 ms Non-operating: 40 g / 11 ms
Certification	CE / LVD / FCC Class-B (TBD)

Ordering Information

AMS310M	Fanless System with MB310, w/o CPU/ memory/ storage/ Power adaptor Supporting vPro & iAMT 11.0, desktop or wall mounting brackets (RoHS2), w/o power adaptor
180W power adaptor (optional)	180W (24V @7.5A) power adaptor, bare wire type Compatible with IEC62368-1/EN62368-1
Optional Accessories	WiFi / Bluetooth antenna kit LTE / 5G antenna kit GPS antenna kit

Dimensions and Drawing

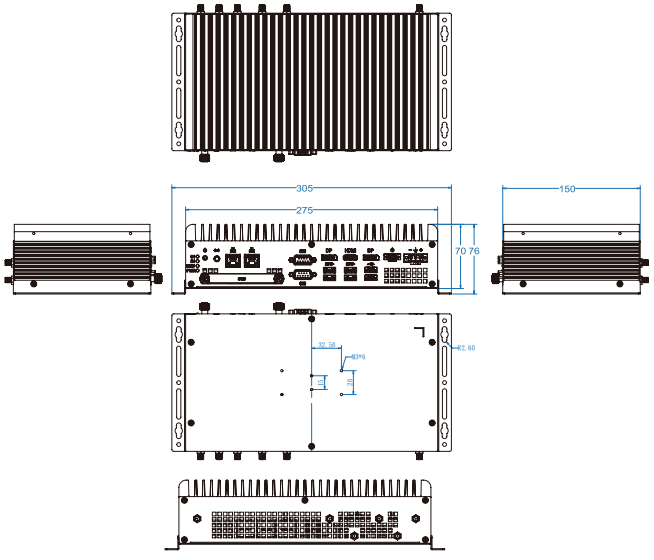

Remarks: 1. Specifications are subject to change without prior notice. 2. ODM/OEM is available. 3. For user's manual & datasheet download, visit www.ibase.com.tw.

AMS312

Compact Expandable Fanless System

10th Gen Intel® Core™ i7/i5/i3 Desktop Processors (35W TDP)

Features

- Compact fanless system with for IBASE MB310 customized board
- 10th Gen Intel® Core™ i7/i5/i3 Processors (35W TDP)
- Front removable drive bay for HDD/SSD
- 1x PCI-E (x8) + 1x PCI-E (x4) expansion slot
- Over/Under/Reverse voltage protection
- Supports DIN-rail mount & wall mount
- TPM 2.0

Specifications

System Mainboard	MB310 with Intel® Q470E PCH
CPU Type	10th Gen Intel® Core™ i7/i5/i3 desktop Processors (35W TDP)
System Speed	Up to 4.5GHz
Memory	2x DDR4-2933/2666 SO-DIMM, Max. 64GB
Front Panel External I/O	6x Antenna hole for WLAN/4G/5G module
Rear Panel External I/O	1x HDMI connector 2x DisplayPort connector 1x Audio jack for Line-out 4x USB 3.0 ports 2x USB 2.0 ports (1x software programmable) 1x Red HDD LED, 1x green power LED, 2x Error LED by programming 1x RS232/422/485 port for COM#1 1x RS232 port for COM#2 2x RJ45 2.5G Ethernet port 1x 3-pin DC-in terminal block for 24V(±10%) 1x 2-pin terminal block connector for remote access 1x Power button
Expansion Slots	1x M.2 2042 E-key (USB 2.0 & PCI-E) 1x M.2 3052 B-key (USB 2.0 & 3.0) 1x PCI-E (x8) slot 1x PCI-E (x4) slot
Storage	1x 2.5" HDD/SSD (external-accessible) 1x M.2 2280 M-key (SATA & PCI-E)
Construction	Aluminum & steel
Chassis Color	Silver & Gray
Mounting	Desktop or wall mounting (wall mount kit included) Side mounting DIN-rail mounting (optional)
Dimensions	275mm (W) x 150mm (D) x 117mm (H) 10.83" (W) x 5.91" (D) x 4.61" (H)
Weight	3.5kg
Operating Temperature	-10°C to 60°C (14°F~140°F) *with air flow -10°C to 50°C (14°F to 122°F) without air flow
Storage Temperature	-20°C to 80°C (-4°F to 176°F)
Relative Humidity	5~90% @ 45°C, (non-condensing)
Vibration	Non-Operating: 1.0 grms / 5~500Hz / random operation Operatiing:0.25 grms / 5~500Hz / random operation
Shock	Operating: 20 g / 11 ms Non-operating: 40 g / 11 ms
Certification	CE / LVD / FCC Class B (TBD)

Ordering Information

AMS312M	Fanless System with MB310, w/o CPU/ memory/ storage/ Power adaptor vPro & iAMT 11.0, desktop or wall mounting brackets (RoHS2), 1x PCI-E (x8) + 1x PCI-E (x4) expansion slots, w/o power adaptor
180W power adaptor (optional)	180W (24V @7.5A) power adaptor, bare wire type Compatible with IEC62368-1/EN62368-1
Optional Accessories	WiFi/BT antenna kit LTE/5G antenna kit GPS antenna kit

Dimensions and Drawing

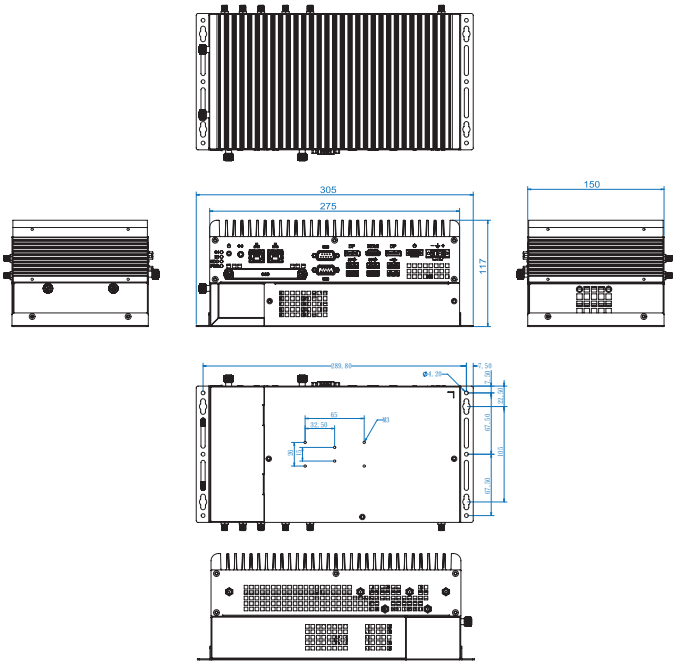

AMS322

Compact Expandable Fanless System

11th Gen Intel® Core™ i7/i5/i3 Processors

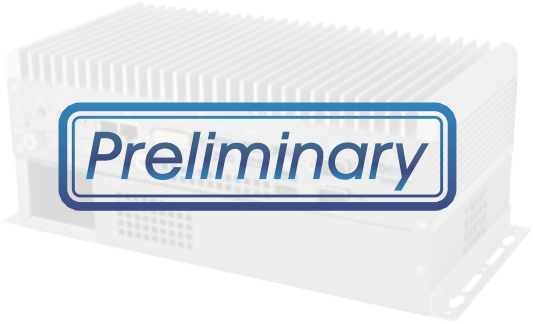

Features

- Compact fanless system with for IBASE MBE320 customized board
- 11th Gen Intel® Core™ i7/i5/i3 Processors
- Front removable drive bay for HDD/SSD
- 1x PCI-E (x8) + 1x PCI-E (x4) expansion slot
- Over/Under/Reverse voltage protection
- Supports DIN-rail mount & wall mount
- TPM 2.0

Specifications

System Mainboard	MBE320 with Intel® CPU onboard
CPU Type	11th Gen Intel® Core™ i7/i5/i3 Processors
System Speed	Up to 4.4GHz
Memory	2x DDR4 SO-DIMM, Max. 64GB
Front Panel External I/O	2x Antenna hole for WLAN/4G/5G module
Rear Panel External I/O	1x 2-pin DC-in terminal block for 24V (±10%) 1x 2-pin terminal block for remote Power button 1x Power Button 3x RJ45 2.5G Ethernet port 2x DisplayPort connector 3x USB 3.1 ports 3x USB 2.0 ports 1x RS232/422/485 port for COM#1 1x RS232 port for COM#2 1x Audio jack for Line-out 1x Red LED for HDD/SSD, 1x Green LED for Power 1x Blue LED & 1 x White LED programmable
Expansion Slots	1x M.2 2042 E-key (USB 2.0 & PCI-E) 1x M.2 3052 B-key (USB 2.0 & 3.0) 1x PCI-E (x16) slot 1x PCI-E (x4) slot
Storage	1x 2.5" HDD/SSD (external-accessible)
Construction	Aluminum & steel
Chassis Color	Silver & Gray
Mounting	Desktop or wall mounting (wall mount kit included) Side mounting DIN-rail mounting (optional)
Dimensions	275mm (W) x 140mm (D) x 117mm (H) 10.83" (W) x 5.51" (D) x 4.61" (H)
Weight	3.5kg
Operating Temperature	-10°C to 60°C (14°F~140°F) *with air flow -10°C to 50°C (14°F to 122°F) without air flow
Storage Temperature	-20°C to 80°C (-4°F to 176°F)
Relative Humidity	5~90% @ 45°C, (non-condensing)
Vibration	Non-Operating: 1.0 grms / 5~500Hz / random operation Operatiing:0.25 grms / 5~500Hz / random operation
Shock	Operating: 20 g / 11 ms Non-operating: 40 g / 11 ms
Certification	CE / LVD / FCC Class B

Ordering Information

AMS322-i7M	Fanless System with MBE320-i7, w/ Intel® Core™ i7-1185G7E Processor, 2x COM, 1x Riser card for 1x PCI-E (x8) + 1x PCI-E (x4) expansion slots, without memory /storage /power adaptor
AMS322-i5M	Fanless System with MBE320-i5, w/ Intel® Core™ i5-1145G7E Processor, 2x COM, 1x Riser card for 1x PCI-E (x8) + 1x PCI-E (x4) expansion slots, without memory /storage /power adaptor
AMS322-i3M	Fanless System with MBE320-i3, w/ Intel® Core™ i3-1115G4E Processor, 2x COM, 1x Riser card for 1x PCI-E (x8) + 1x PCI-E (x4) expansion slots, without memory /storage /power adaptor
Optional Accessories	180W (24V @7.5A) power adaptor, bare wire type, IEC62368-1/EN62368-1 compatible WiFi/BT antenna kit 5G/4G/LTE antenna kit GPS antenna kit DIN rail bracket

Dimensions and Drawing

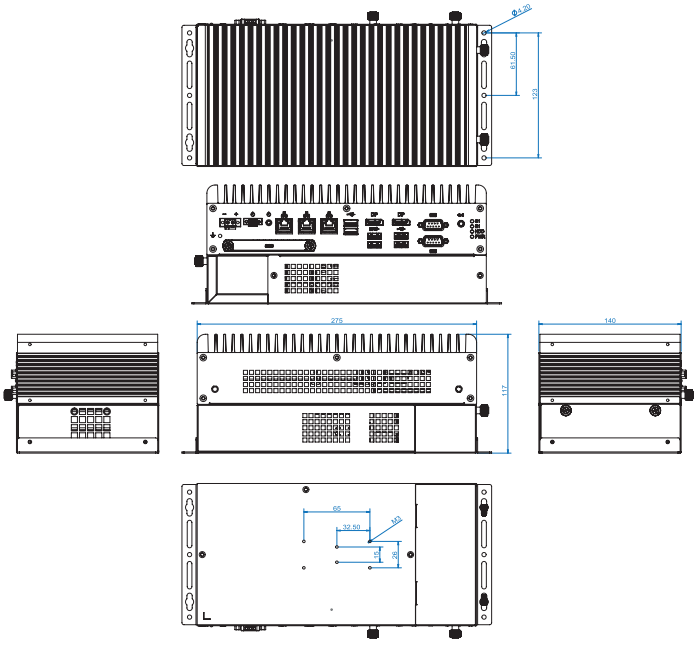

Remarks: 1. Specifications are subject to change without prior notice. 2. ODM/OEM is available. 3. For user's manual & datasheet download, visit www.ibase.com.tw.

AMI220

Compact Expandable Fanless System

7th/6th Gen Intel® Core™ i7/i5/i3 Desktop Processors (35W TDP)

Rear I/O

Features

- Fanless system with IBASE MB220 customized board
- 7th/6th Gen Intel ® Core™ i7/i5/i3 Processors (35W TDP)
- Supports three independent display outputs
- Flexible expansion slot system
- Dual SIM slot supports WWAN redundancy
- 12V(-10%) ~ 24V(+10%) DC wide-range voltage input
- Over/Under/Reverse voltage protection
- iSMART, iAMT (11.6), TPM (2.0)

Specifications

System Mainboard	MB220AF-1 with Intel® Q170 PCH MB220EF-1 with Intel® H110 PCH
CPU Type	7th/6th Gen Intel® Core™ i7/i5/i3 desktop processors (35W TDP)
System Speed	Up to 3.4GHz
Memory	2x 2GB DDR4-2400 SO-DIMM, Max. 32GB
Front Panel External I/O	1x DVI-D + 1x VGA 1x Audio jack for MIC-in / Line-out 4x USB 2.0 ports 1x Red HDD LED 1x Power button with green LED indicator 2x SIM card slots 1x 2-pin terminal block for external power button
Rear Panel External I/O	1x RS232/RS422/485 port for COM#1 3x RS232 port for COM#2/COM#3/COM#4 2x DisplayPort connector 1x RJ45 Gigabit Ethernet port + 2x USB 3.0 ports 1x RJ45 Gigabit Ethernet port + 2x USB 3.0 ports 1x 3 pin DC-in terminal block for 12V(-10%) ~ 24V(+10%) 2x Antenna holes
Expansion Slots	N/A
Storage	1x 2.5" HDD/SSD 2x mSATA (AMI220AF only) & 1x mSATA (AMI220EF only) RAID 0,1,5,10 support (AF version only)
Construction	Aluminum & steel
Chassis Color	Silver & Gray
Mounting	Desktop or wall mount (wall mount kit included)
Dimensions	210mm (W) x 265mm (D) x 77mm (H) 8.27" (W) x 10.43" (D) x 3.03" (H)
Weight	3.6kg
Operating Temperature	-10°C to 50°C (14°F~122°F)
Storage Temperature	-20°C ~ 80°C (-4°F~176°F)
Relative Humidity	5~90% @ 45°C, (non-condensing)
Vibration	Non-Operating: 1.0 grms / 5~500Hz / random operation Operatiing: 0.25 grms / 5~500Hz / random operation
Shock	Operating: 20G/ 11ms Non-Operating: 40G/ 11ms (MIL-STD-810G)
Certification	CE / LVD /FCC Class-B / CCC

Ordering Information

AMI220AF	Fanless box system with MB220AF, w/ Intel® Core™ i7/i5/i3 desktop Processor, 4x COM, 2x 4GB memory, 1x 2.5" 64GB MLC industrial-grade SSD, w/o power adaptor
AMI220EF	Fanless box system with MB220EF, w/ Intel® Core™ i7/i5/i3 desktop Processor, 4x COM, 2x 4GB memory, 1x 2.5" 64GB MLC industrial-grade SSD, w/o power adaptor
150W power adaptor (optional)	150W (12V @12.5A) power adaptor, bare wire type Compatible with IEC62368-1/EN62368-1
Optional Accessories	GPS antenna kit

Dimensions and Drawing

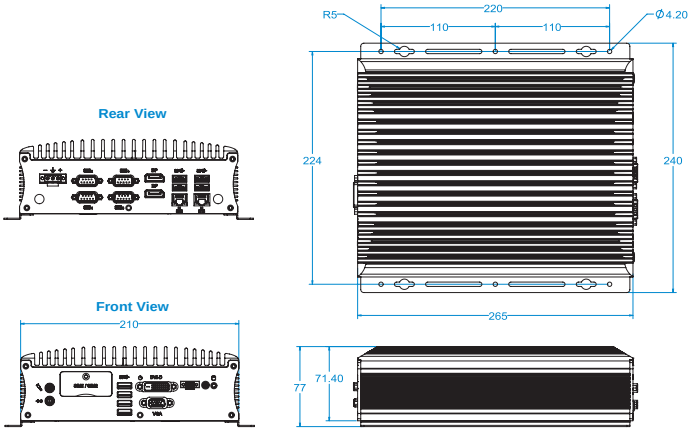

AMI221

Compact Expandable Fanless System

7th/6th Gen Intel® Core™ i7/i5/i3 Desktop Processors (35W TDP)

Rear I/O

Features

- Fanless system with IBASE MB220 customized board
- 7th/6th Gen Intel ® Core™ i7/i5/i3 Processors (35W TDP)
- Supports three independent display outputs
- Flexible expansion slot system
- Dual SIM slots support WWAN redundancy
- 2x 2.5" HDD/SSD (Supports RAID 0/1)
- 12V(-10%) ~ 24V(+10%) DC wide-range voltage input
- Over/Under/Reverse voltage protection
- iSMART, iAMT (11.6), TPM (2.0)

Specifications

System Mainboard	MB220AF-1 with Intel® Q170 PCH MB220EF-1 with Intel® H110 PCH
CPU Type	7th/6th Gen Intel® Core™ i7/i5/i3 desktop processors (35W TDP)
System Speed	Up to 3.4GHz
Memory	2x 2GB DDR4-2400 SO-DIMM, Max. 32GB
Front Panel External I/O	1x DVI-D + 1x VGA 1x Audio jack for MIC-in / Line-out 4x USB 2.0 ports 1x Red HDD LED 1x Power button with green LED indicator 2x SIM card slots 1x 2-pin terminal block for external power button 1x front removable drive bay for SSD
Rear Panel External I/O	1x RS232/RS422/485 port for COM#1 5x RS232 port for COM#2/COM#2~6 2x DisplayPort connector 1x RJ45 Gigabit Ethernet port + 2x USB 3.0 port 1x RJ45 Gigabit Ethernet port + 2x USB 3.0 port 1x 3-pin DC-in terminal block for 12V(-10%) ~ 24V(+10%) 2x Antenna holes 1x Expansion slot
Expansion Slots	1x Mini PCI-E sockets
Storage	2x 2.5" HDD/SSD (1x internal & 1x external-accessible) 2x mSATA (AMI221AF only) & 1x mSATA (AMI221EF only) RAID 0,1,5,10 support (AF version only)
Construction	Aluminum & steel
Chassis Color	Silver & Gray
Mounting	Desktop or wall mount (wall mount kit included)
Dimensions	210mm (W) x 265mm (D) x 108.6mm (H) 8.27" (W) x 10.43" (D) x 4.28" (H)
Weight	4.3kg
Operating Temperature	-10°C to 50°C (14°F~122°F)
Storage Temperature	-20°C ~ 80°C (-4°F~176°F)
Relative Humidity	5~90% @ 45°C, (non-condensing)
Vibration	Non-Operating: 1.0 grms / 5~500Hz / random operation Operatiing: 0.25 grms / 5~500Hz / random operation
Shock	Operating: 20G/ 11ms Non-Operating: 40G/ 11ms (MIL-STD-810G)
Certification	CE / LVD / FCC Class-B

Ordering Information

AMI221AF	Fanless box System with MB220AF, w/ Intel® Core™ i7/i5/i3 desktop Processor, 6x COM (from IP214 / IP215), 2x 4GB memory, 1x 2.5" 64GB MLC industrial-grade SSD, w/o power adaptor, optional riser card
AMI221EF	Fanless box System with MB220EF, w/ Intel® Core™ i7/i5/i3 desktop Processor, 6x COM (from IP214 / IP215), 2x 4GB memory, 1x 2.5" 64GB MLC industrial-grade SSD, w/o power adaptor, optional riser card
IP214 Riser Card Kit (optional)	IP214 ZM05IP214---0A1000P) w/ COM cable (2x C501PK1H009302A00P) for AMI221/AMI231
IP215 Riser Card Kit (optional)	IP215 (ZM05IP215---0A1000P) w/ COM cable (2x C501PK1H009302A00P) for AMI221/AMI231
150W power adaptor (optional)	150W (12V @12.5A) power adaptor, bare wire type Compatible with IEC62368-1/EN62368-1
Optional Accessories	GPS antenna kit

Recommended Processor List

Model	TDP	Base Freq	Turbo Freq	Cache	Cores / Threads
i7-7700T	35W	2.9 GHz	3.8 GHz	8M	4/8
i7-6700TE	35W	2.4 GHz	3.4 GHz	8M	4/8
i5-7500T	35W	2.7 GHz	3.3 GHz	6M	4/4
i5-6500TE	35W	2.3 GHz	3.3 GHz	6M	4/4
i3-7101TE	35W	3.4 GHz	N/A	3M	2/4
i3-6100TE	35W	2.7 GHz	N/A	4M	2/4
G4400TE	35W	2.9 GHz	N/A	3M	2/2
G3900TE	35W	2.6 GHz	N/A	2M	2/2

Remarks: 1. Specifications are subject to change without prior notice. 2. ODM/OEM is available. 3. For user's manual & datasheet download, visit www.ibase.com.tw.

Expansion Cards

IP214

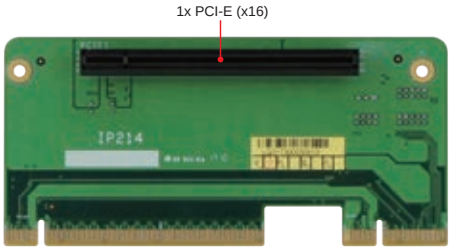

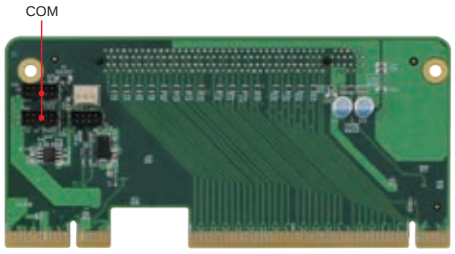

IP215

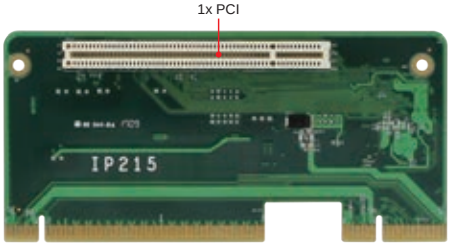

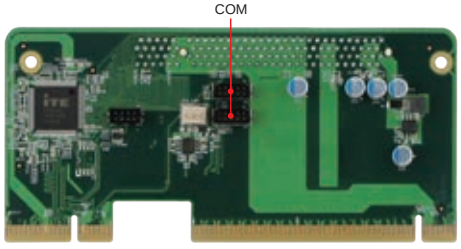

COM#5-6 from IP214 & IP215

Dimensions and Drawing

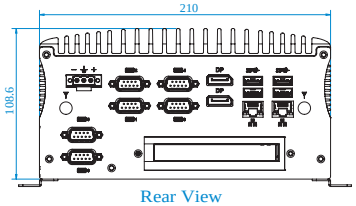

Rear View

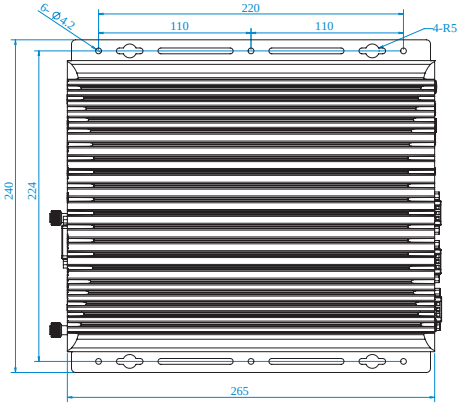

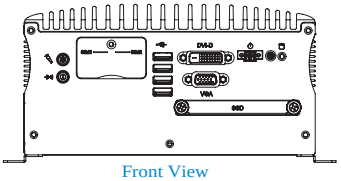

Front View

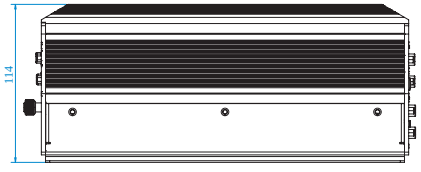

AMI222

Compact Expandable Fanless System

7th/6th Gen Intel® Core™ i7/i5/i3 Desktop Processors (35W TDP)

Rear I/O

Features

- Fanless system with IBASE MB220 customized board
- 7th/6th Gen Intel ® Core™ i7/i5/i3 Processors (35W TDP)
- Supports three independent display outputs
- Flexible expansion slot system
- Dual SIM slots support WWAN redundancy
- 2x 2.5" HDD/SSD (Supports RAID 0/1)
- 12V(-10%) ~ 24V(+10%) DC wide-range voltage input
- Over/Under/Reverse voltage protection
- iSMART, iAMT (11.6), (TPM 2.0)

Specifications

System Mainboard	MB220AF-1 with Intel® Q170 PCH MB220EF-1 with Intel® H110 PCH
CPU Type	7th/6th Gen Intel® Core™ i7/i5/i3 desktop processors (35W TDP)
System Speed	Up to 3.4GHz
Memory	2x 2GB DDR4-2400 SO-DIMM, Max. 32GB
Front Panel External I/O	1x DVI-D + 1x VGA 1x Audio jack for MIC-in / Line-out 4x USB 2.0 ports 1x Red HDD LED 1x Power button with green LED indicator 2x SIM card slots 1x 2-pin terminal block for external power button 1x Front removable drive bay for SSD
Rear Panel External I/O	1x RS232/RS422/485 port for COM#1 5x RS232 port for COM#2/COM#2~6 2x DisplayPort connector 1x RJ45 Gigabit Ethernet port + 2x USB 3.0 port 1x RJ45 Gigabit Ethernet port + 2x USB 3.0 port 1x 3-pin DC-in terminal block for 12V(-10%)~24V(+10%) 2x USB 2.0 port (AMI222AF only) 2x Antenna holes 2x Expansion slots
Expansion Slots	2x Mini PCI-E sockets
Storage	2x 2.5" HDD/SSD (1x internal & 1x external-accessible) 2x mSATA (AMI222AF only) & 1x mSATA (AMI222EF only) RAID 0,1,5,10 support (AF version only)
Construction	Aluminum & steel
Chassis Color	Silver & Gray
Mounting	Desktop or wall mount (wall mount kit included)
Dimensions	210mm (W) x 265mm (D) x 128.6mm (H) 8.27" (W) x 10.43" (D) x 5.06" (H)
Weight	4.3kg
Operating Temperature	-10°C to 50°C (14°F~122°F)
Storage Temperature	-20°C ~ 80°C (-4°F~176°F)
Relative Humidity	5~90% @ 45°C, (non-condensing)
Vibration	Non-Operating: 1.0 grms / 5~500Hz / random operation Operatiing: 0.25 grms / 5~500Hz / random operation
Shock	Operating: 20G/ 11ms Non-Operating: 40G/ 11ms (MIL-STD-810G)
Certification	CE / LVD / FCC Class-B

Ordering Information

AMI222AF	Fanless box system with MB220AF, w/ Intel® Core™ i7/i5/i3 desktop Processor, 6x COM (from IP211 / IP212), 2x 4GB memory, 1x 2.5" 64GB MLC industrial-grade SSD, w/o power adaptor, optional riser card
AMI222EF	Fanless box system with MB220EF, w/ Intel® Core™ i7/i5/i3 desktop Processor, 6x COM (from IP211 / IP212), 2x 4GB memoy, 1x 2.5" 64GB MLC industrial-grade SSD, w/o power adaptor, optional riser card
IP211 Riser Card Kit (optional)	IP211 (ZM05IP211---0B1000P) w/ COM cable (2x C501PK1H009302A00P) for AMI222/AMI232
IP212 Riser Card Kit (optional)	IP212 (ZM05IP212---0A1000R) w/ COM cable (2x C501PK1H009302A00P) for AMI222/AMI232
IP213 Riser Card Kit (optional)	IP213 (ZM05IP213---0A1000R) w/o COM cable for AMI222/AMI232
150W power adaptor (optional)	150W (12V @12.5A) power adaptor, bare wire type Compatible with IEC62368-1/EN62368-1
Optional Accessories	GPS antenna kit

Recommended Processor List

Model	TDP	Base Freq	Turbo Freq	Cache	Cores / Threads
i7-7700T	35W	2.9 GHz	3.8 GHz	8M	4/8
i7-6700TE	35W	2.4 GHz	3.4 GHz	8M	4/8
i5-7500T	35W	2.7 GHz	3.3 GHz	6M	4/4
i5-6500TE	35W	2.3 GHz	3.3 GHz	6M	4/4
i3-7101TE	35W	3.4 GHz	N/A	3M	2/4
i3-6100TE	35W	2.7 GHz	N/A	4M	2/4
G4400TE	35W	2.9 GHz	N/A	3M	2/2
G3900TE	35W	2.6 GHz	N/A	2M	2/2

Remarks: 1. Specifications are subject to change without prior notice. 2. ODM/OEM is available. 3. For user's manual & datasheet download, visit www.ibase.com.tw.

Expansion Cards

IP211

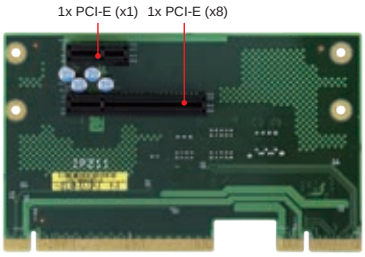

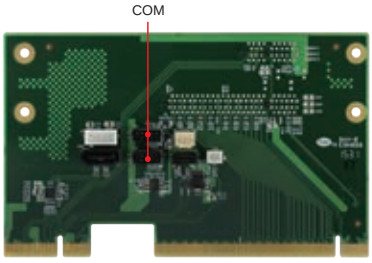

IP212

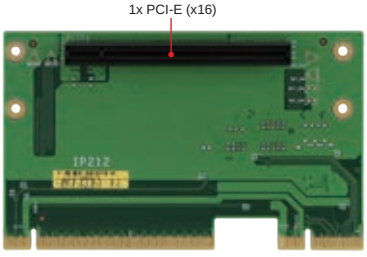

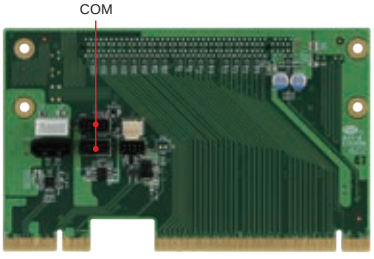

IP213

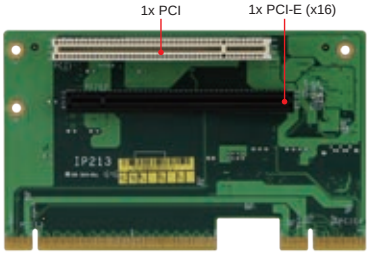

COM#5-6 from IP211/IP212

Dimensions and Drawing

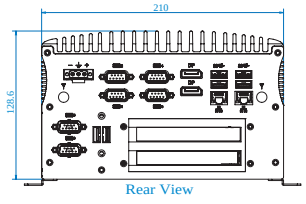

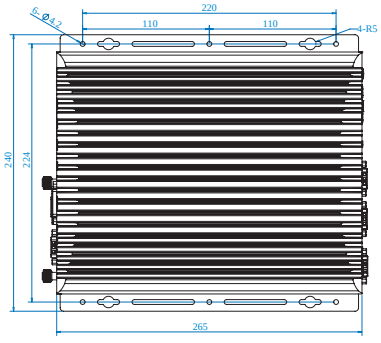

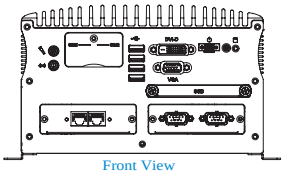

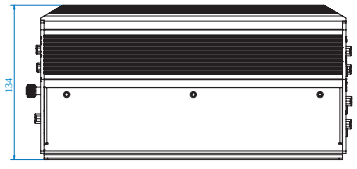

AMI230

Compact Expandable Fanless System

9th/8th Gen Intel® Core™ i7/i5/i3 Desktop Processors (35W TDP)

Rear I/O

TAIWAN EXCELLENCE 2021

Features

- Fanless system with IBASE MB230 customized board
- 9th/8th Gen Intel® Core™ i7/i5/i3 Desktop Processors
- Dual SIM slots support WWAN redundancy
- 4x RJ45 Gigabit Ethernet port (2x support 802.3at PoE+)
- 3x M.2 (B-Key/E-Key/M-Key)
- Supports Over/Under/Reverse voltage protection
- iSMART, iAMT (11.6), TPM (2.0)

Specifications

System Mainboard	MB230AF with Intel® Q370 PCH
CPU Type	9th/8th Gen Intel® Core™ i7/i5/i3 desktop processors
System Speed	Up to 4.0 GHz
Memory	2x DDR4-2666/2400 SO-DIMM, Max. 32GB
Front Panel External I/O	2x RS232/422/485 port for COM#1~COM#2 2x RS232 ports for COM#3~COM#4 1x DisplayPort (1.2) 2x RJ45 Gigabit Ethernet port (supports 802.3at PoE+) 1x 5-pins DC-in terminal block type for 12V (±10%) or 18V (-10%)~24V (+10%) 2x Antenna holes
Rear Panel External I/O	1x DVI-D + HDMI(1.4) 4x USB 3.1 ports 2x Antenna holes 2x RJ45 Gigabit Ethernet ports + dual USB 3.1 stack ports 1x Red HDD LED 1x Power button with Green LED indicator 1x 2-pin terminal block 2x SIM card
Expansion Slots	1x M.2 (B-Key supports USB 2.0 for 4G/LTE) 1x M.2 (E-Key supports PCI-E + USB 2.0 for CNVi) 1x M.2 (M-Key supports PCI-E(4x) + SATA for NVMe SSD)
Storage	1x 2.5" HDD/SSD, M.2 (M-Key)
Construction	Aluminum & steel
Chassis Color	Silver & Gray
Mounting	Desktop & wall mount
Dimensions	210mm (W) x 285mm (D) x 77mm (H) 8.27" (W) x 11.22" (D) x 3.03" (H)
Weight	4kg
Operating Temperature	-20°C to 70°C (-4°F~158°F) (for 35W CPU)
Storage Temperature	-20°C~80°C (-4°F~176°F)
Relative Humidity	5~90% @60°C, (non-condensing)
Vibration	Operating: 3Grms / 5~500Hz
Shock	Operating: 20G / 11ms Non-operating: 40G / 11ms

Certification	CE/ FCC Class A/ LVD

Ordering Information

AMI230AF (Supports Sierra module)	Fanless box System with MB230AF, w/ Intel® Core™ i7/i5/i3 desktop Processor, 4x COM, 1x 8GB memory, 1x 2.5" 64GB MLC industrial-grade SSD, w/o power adaptor
270W Power Adaptor Kit (optional)	270W (24V@11.25A) power adaptor kit Compatible with IEC62368-1/EN62368-1
Optional Accessories	Global 4G antenna kit for Sierra Wireless EM7565 module, M.2 (M-Key 2280) Thermal kit

Recommended Processor List

Model	TDP	Base Freq	Turbo Freq	Cache	Cores / Threads
i7-9700TE	35W	1.8 GHz	3.8 GHz	12M	8/8
i7-8700T	35W	2.4 GHz	4.0 GHz	12M	6/12
i5-9500TE	35W	2.2 GHz	3.6 GHz	9M	6/6
i5-8500T	35W	2.1 GHz	3.5 GHz	9M	6/6
i3-9100TE	35W	2.2 GHz	3.2 GHz	6M	4/4
i3-8100T	35W	3.1 GHz	N/A	6M	4/4
G5400T	35W	3.1 GHz	N/A	4M	2/4
G4900T	35W	2.9 GHz	N/A	2M	2/2

Remarks: 1. Specifications are subject to change without prior notice. 2. ODM/OEM is available. 3. For user's manual & datasheet download, visit www.ibase.com.tw.

Comparison of AMI Series Systems

Depth

265mm
10.43-inch

AMI220

285mm
11.22-inch

AMI230

Real I/O

AMI220

AMI230

Front I/O

AMI220

AMI230

Dimensions and Drawing

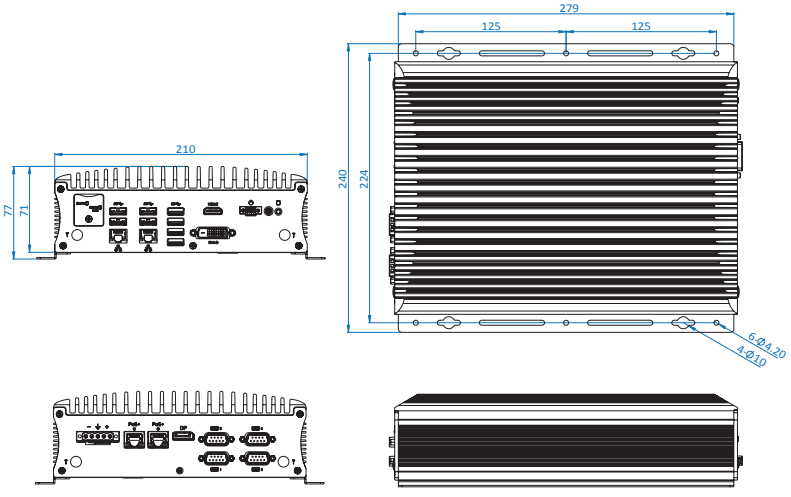

AMI231

Compact Expandable Fanless System

9th/8th Gen Intel® Core™ i7/i5/i3 Desktop Processors (35W TDP)

Rear I/O

Features

- Fanless system with IBASE MB230 customized board
- 9th/8th Gen Intel® Core™ i7/i5/i3 Desktop Processors
- Dual SIM slots support WWAN redundancy
- 4x RJ45 Gigabit Ethernet port (2x supports 802.3at PoE+)
- 3x M.2 (B-Key/E-Key/M-Key)
- Supports Over/Under/Reverse voltage protection
- iSMART, iAMT (11.6), TPM (2.0)
- Flexible expansion slot system
- 2x 2.5" storage (supports RAID 0/1)

Specifications

System Mainboard	MB230AF with Intel® Q370 PCH
CPU Type	9th/8th Gen Intel® Core™ i7/i5/i3 desktop processors
System Speed	Up to 4.00 GHz
Memory	2x DDR4-2666/2400 SO-DIMM, Max. 32GB
Front Panel External I/O	1x RS232/422/485 port for COM#1~COM#2 3x RS232 ports for COM#3~COM#4 2x RS232 ports for COM#5~6 from optional IP214/5 1x DisplayPort (1.2) 2x RJ45 Gigabit Ethernet port (Supports 802.3at PoE+) 1x 5-pins DC-in terminal block type for 12V (±10%) or 18V (-10%)~24V (+10%) 2x Antenna holes 1x expansion slot
Rear Panel External I/O	1x DVI-D + HDMI(1.4) 4x USB3.1 ports 2x Antenna holes 2x RJ45 Gigabit Ethernet port + Dual USB3.1 stack ports 1x Red HDD LED 1x Power button with Green LED indicator 1x 2-pin terminal block 2x SIM card
Expansion Slots	1x Flexible PCI-E / PCI expansion slot 1x M.2 (B-Key supports USB 2.0 for 4G/LTE) 1x M.2 (E-Key supports PCI-E + USB 2.0 for CNVi) 1x M.2 (M-Key supports PCI-E(4x) + SATA for NVMe SSD)
Storage	2x 2.5" HDD/SSD 1x M.2 (M-Key supports PCI-E(4x) + SATA for NVMe SSD)
Construction	Aluminum & steel
Chassis Color	Silver & Gray
Mounting	Desktop & wall mount
Dimensions	210mm (W) x 285mm (D) x 109mm (H) 8.27" (W) x 11.22" (D) x 4.29" (H)

Weight	4.5 kg
Operating Temperature	-20°C to 70°C (-4°F~158°F) (for 35W CPU)
Storage Temperature	-20°C~80°C (-4°F~176°F)
Relative Humidity	5~90% @60°C, (non-condensing)
Vibration	Operating : 3Grms / 5~500Hz
Shock	Operating : 20G / 11ms Non-operating : 40G / 11ms
Certification	CE / FCC Class A/ LVD

Ordering Information

AMI231AF (Supports Sierra module)	Fanless box System with MB230AF, w/ Intel® Core™ i7/i5/i3 desktop Processor, 6x COM (from IP214 / IP215), 1x 8GB memory, 1x 2.5" 64GB MLC industrial-grade SSD, w/o power adaptor, optional riser card
IP214 Riser Card Kit (optional)	IP214 (ZM05IP214---0A1000P) w/ COM cable (2x C501PK1H009302A00P) for AMI221/AMI231
IP215 Riser Card Kit (optional)	IP215 (ZM05IP215---0A1000P) w/ COM cable (2x C501PK1H009302A00P) for AMI221/AMI231
330W Power Adaptor Kit (optional)	330W (24V@13.75A) power adaptor kit Compatible with IEC62368-1/EN62368-1
Optional Accessories	Global 4G antenna kit for Sierra Wireless EM7565 module, M.2 (M-Key 2280) Thermal kit

Remarks: 1. Specifications are subject to change without prior notice. 2. ODM/OEM is available. 3. For user's manual & datasheet download, visit www.ibase.com.tw.

Expansion Cards

IP214

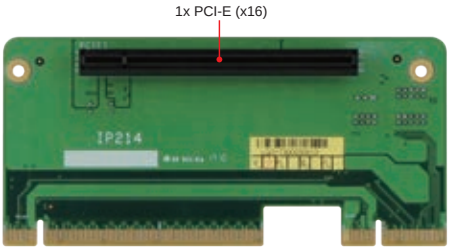

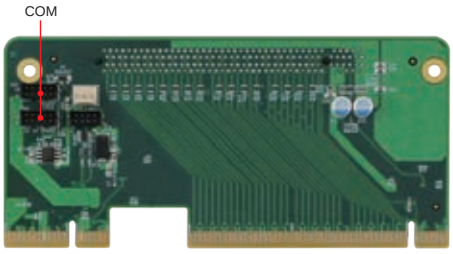

IP215

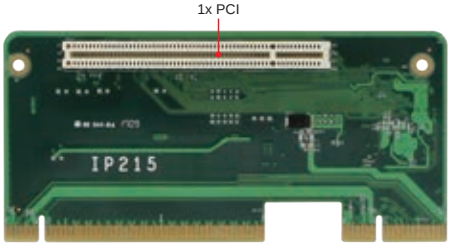

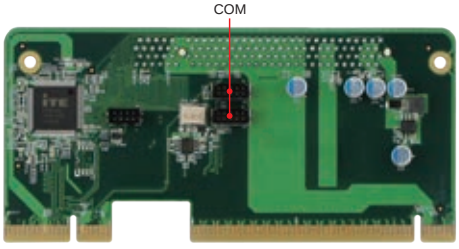

COM#5-6 from IP214 & IP215

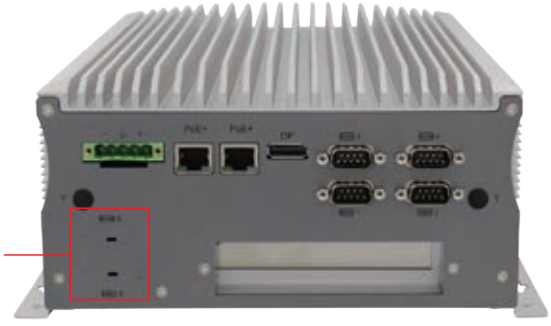

Dimensions and Drawing

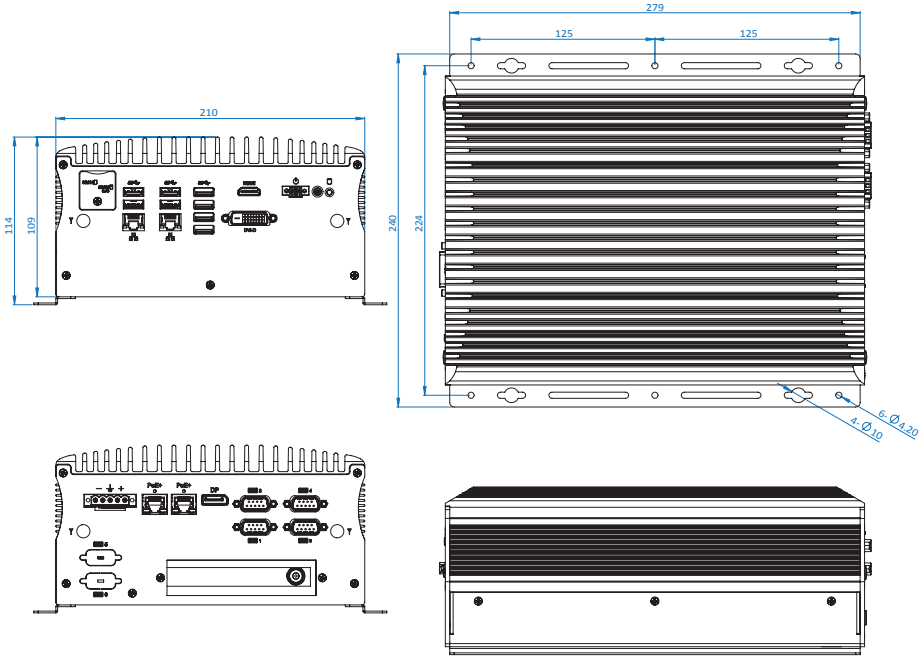

AMI232

Compact Expandable Fanless System

9th/8th Gen Intel® Core™ i7/i5/i3 Desktop Processors (35W TDP)

Rear I/O

Features

- Fanless system with IBASE MB230 customized board
- 9th/8th Gen Intel® Core™ i7/i5/i3 Desktop Processors
- Dual SIM slots supports WWAN redundancy
- 4x RJ45 Gigabit Ethernet port (2x Supports 802.3at PoE+)
- 3x M.2 (B-Key/E-Key/M-Key)
- Supports Over/Under/Reverse voltage protection
- iSMART, iAMT (11.6), TPM (2.0)
- 2x Flexible PCI-E / PCI expansion slot
- 2x 2.5" storage (supports RAID 0/1)

Specifications

System Mainboard	MB230AF with Intel® Q370 PCH
CPU Type	9th/8th Gen Intel® Core™ i7/i5/i3 desktop processors
System Speed	Up to 4.00 GHz
Memory	2x DDR4-2666/2400 SO-DIMM, Max. 32GB
Front Panel External I/O	1x RS232/422/485 port for COM#1~COM#2 3x RS232 ports for COM#3~COM#4 2x RS232 ports for COM#5~6 from optional IP211/IP212 1x DisplayPort (1.2) 2x RJ45 Gigabit Ethernet port (supports 802.3at PoE+) 1x 5-pins DC-in terminal block type for 12V (±10%) or 18V (-10%)~24V (+10%) 2x Antenna holes 2x USB 2.0 from optional IP211/IP212/IP213 2x expansion slot
Rear Panel External I/O	1x DVI-D + HDMI(1.4) 4x USB3.1 ports 2x Antenna holes 2x RJ45 Gigabit Ethernet port + Dual USB3.1 stack ports 1x Red HDD LED 1x Power button with Green LED indicator 1x 2-pin terminal block 2x SIM card
Expansion Slots	2x Flexible PCI-E / PCI expansion slot 1x M.2 (B-Key supports USB 2.0 for 4G/LTE) 1x M.2 (E-Key supports PCI-E + USB 2.0 for CNVi) 1x M.2 (M-Key supports PCI-E(4x) + SATA for NVMe SSD)
Storage	2x 2.5" HDD/SSD 1x M.2 (M-Key supports PCI-E(4x) + SATA for NVMe SSD)
Construction	Aluminum & steel
Chassis Color	Silver & Gray
Mounting	Desktop & wall mount
Dimensions	210mm (W) x 285mm (D) x 129mm (H) 8.27" (W) x 11.22" (D) x 5.08" (H)
Weight	4.9 kg

Operating Temperature	-20°C to 70°C (-4°F~158°F) (for 35W CPU)
Storage Temperature	-20°C~80°C (-4°F~176°F)
Relative Humidity	5~90% @60°C, (non-condensing)
Vibration	Operating: 3Grms / 5~500Hz
Shock	Operating: 20G / 11ms Non-operating: 40G / 11ms
Certification	CE/ FCC ClassA/ LVD

Ordering Information

AMI232AF (Supports Sierra module)	Fanless box System with MB230AF, w/ Intel® Core™ i7/i5/i3 desktop Processor, 6x COM (from IP211/IP212) 4x COM (from IP213), 1x 8GB memory, 1x 2.5" 64GB MLC industrial-grade SSD, w/o power adaptor, optional riser card
AMI232-217	Fanless box System with MB230AF, w/ Intel® Core ™ i5-8500T desktop Processor, 4x COM, 1x 8GB memory, 1x 2.5" 64GB MLC industrial-grade SSD, Riser card (IP217), w/o power adaptor
IP211 Riser Card Kit (optional)	IP211(ZM05IP211---0B1000P) w/ COM cable (2x C501PK1H009302A00P) for AMI222/AMI232
IP212 Riser Card Kit (optional)	IP212 (ZM05IP212---0A1000R) w/ COM cable (2x C501PK1H009302A00P) for AMI222/AMI232
IP213 Riser Card Kit (optional)	IP213 (ZM05IP213---0A1000R) w/o COM cable for AMI222/AMI232
330W Power Adaptor Kit (optional)	330W (24V@13.75A) power adaptor kit compatible with IEC62368-1/EN62368-1
Optional Accessories	Global 4G antenna kit for Sierra Wireless EM7565 module, M.2 (M-Key 2280) Thermal kit

Remarks: 1. Specifications are subject to change without prior notice. 2. ODM/OEM is available. 3. For user's manual & datasheet download, visit www.ibase.com.tw.

Expansion Cards

IP211

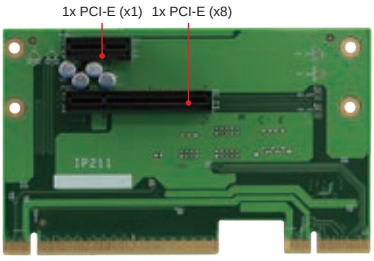

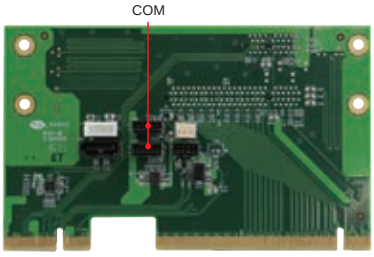

IP212

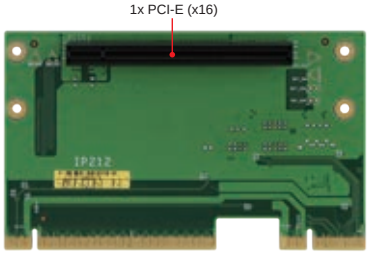

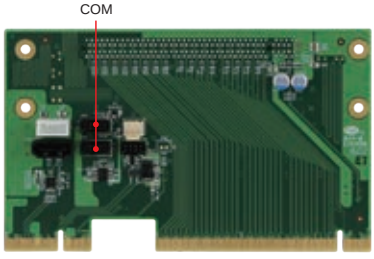

IP213

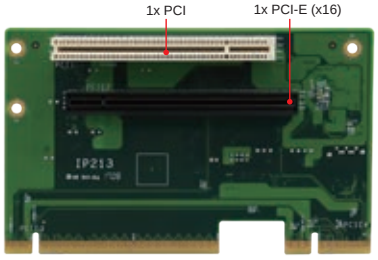

IP217

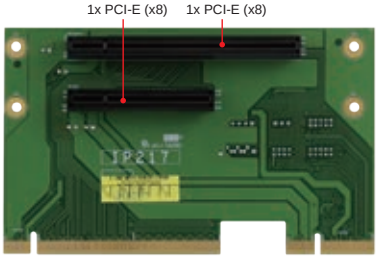

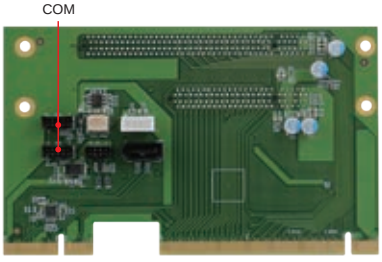

COM#5-6 from IP211 & IP212 & IP217

Dimensions and Drawing

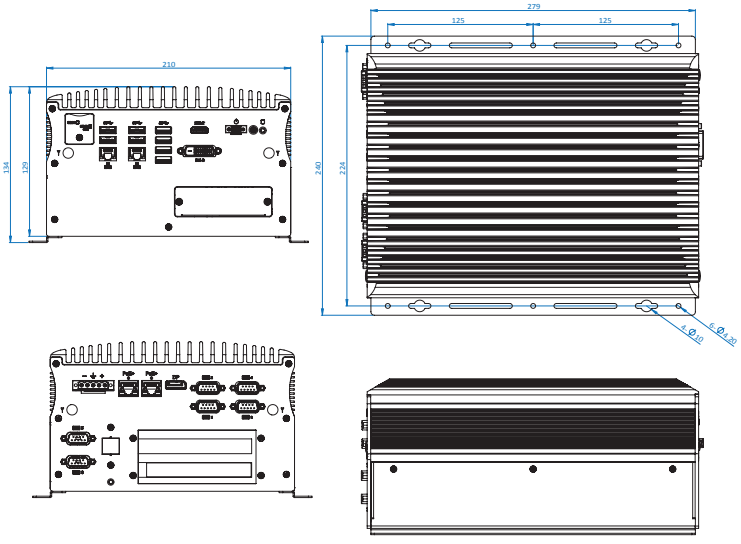

AMI240

Compact Expandable Fanless System

13th Gen Intel® Core™ i7/i5/i3 Desktop Processors

Features

- Fanless system with IBASE MBE240 customized board
- 13th Gen Intel® Core™ i7/i5/i3 Desktop Processors
- Dual SIM slots support WWAN redundancy
- 4x RJ45 Gigabit Ethernet port (2x Support 802.3at,PoE+)
  3x M.2 (B-Key/E-Key/M-Key)
- Supports Over/Under/Reverse voltage protection
- iSMART, iAMT (16.1), TPM (2.0)

Specifications

System Mainboard	MBE240AF with Intel® Q670E PCH
CPU Type	13th Gen Intel® Core™ i7/i5/i3 Desktop Processors
System Speed	Up to 4.80 GHz
Memory	2x DDR5-4800/5600 SO-DIMM, Max. 64GB
Front Panel External I/O	2x RS232/422/485 port for COM#1~COM#2 2x RS232 ports for COM#3~COM#4 1x DisplayPort (1.2) 2x RJ45 Gigabit Ethernet port (Support 802.3at,PoE+) 1x 5-pin DC-in terminal block type for 24V 2x Antenna holes
Rear Panel External I/O	2x HDMI(2.0b) 1x Audio jack for MIC-in / Line-out 4x USB3.2 ports 2x Antenna holes 2x RJ45 Gigabit Ethernet port + Dual USB3.2 stack ports 1x Red HDD LED 1x Power button with Green LED indicator 1x 2-pin terminal block 2x SIM card
Expansion Slots	1x M.2 (E-Key) 1x M.2 (B-Key)
Storage	1x 2.5 HDD/SSD 1x M.2 (M-Key) *Supports NVMe SSD
Construction	Aluminum & steel
Chassis Color	Silver + Gray (Aluminum)
Mounting	Desktop & wall mount
Dimensions	210mm(W) x 285mm(D) x 77mm(H) 8.27" (W) x 11.22" (D) x 3.03" (H)
Weight	TBD
Operating Temperature	-20°C to 70°C (-4°F~158°F) (for 35W CPU)
Storage Temperature	-20°C~80°C (-4°F~176°F)
Relative Humidity	5%~90%@45°C (non-condensing)
Vibration	Operating : 0.25Grms / 5~500Hz Non-operating : 1Grms / 5~500Hz
Shock	Operating : 20G / 11ms Non-operating : 40G / 11ms
Certification	CE *follow EN55032* FCC ClassA / LVD

Ordering Information

AMI240AF (Supports Sierra module)	Fanless Box System with Intel® Core™ i7/i5/i3 desktop, 4x COM, 1x 8GB memory, 1x 2.5" 64GB MLC industrial-grade SSD, w/o power adaptor
270W Power Adaptor Kit (optional)	270W (24@11.25A) power adaptor kit compatible with IEC62368-1/ EN62368-1

Recommended Processor List

Model	TDP	Base-Freq	Turbo Freq	Cach	Core/ Threads
i9-13900TE	35W	1.0GHZ	5.0GHz	32MB	24/32
i7-13700TE	35W	1.1GHz	4.8GHz	30MB	16/24
i5-13500TE	35W	1.1GHz	4.5GHz	24MB	14/20
i3-13100TE	35W	2.4GHz	N/A	12MB	4/8
G7400TE	35W	3.0GHz	N/A	6MB	2/4
G6900TE	35W	2.4GHz	N/A	4MB	(2/2

Remarks: 1. Specifications are subject to change without prior notice. 2. ODM/OEM is available. 3. For user's manual & datasheet download, visit www.ibase.com.tw.

Comparison of AMI Series Systems

Depth

265mm
10.43-inch

AMI220

285mm
11.22-inch

AMI240

Real I/O

210mm 8.27-inch

AMI220

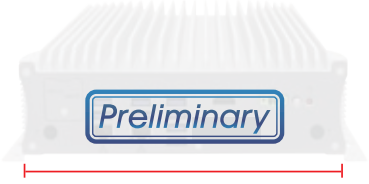

210mm 8.27-inch

AMI240

Front I/O

210mm 8.27-inch

AMI220

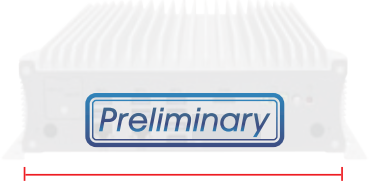

210mm 8.27-inch

AMI240

CMI Series Chassis & Motherboard

CMI202 System

CMI211 System

CMI212 System

CMI221 System

CMI222 System

CMI300 System

Compatible Motherboard List

Model	CMI202	CMI211	CMI212	CMI221	CMI222	CMI300
MI999		V	V			
MI989		V				
MI992		V				
MI991	V	V	V	V		
MI990		V	V			
MI988						V
MI811					V	
MI808					V	

Remarks: 1. Specifications are subject to change without prior notice. 2. ODM/OEM is available. 3. For user's manual & datasheet download, visit www.ibase.com.tw.

Comparison of CMI Series

System Width

7.8-inch (198mm)

CMI212

7.87-inch (200mm)

CMI300

11.81-inch (300mm)

CMI211

11.81-inch (300mm)

CMI222

11.81-inch (300mm)

CMI221

13.58-inch (345mm)

CMI202

System Depth

7.87-inch (200mm)

CMI300

8.07-inch (205mm)

CMI211

9.25-inch (235mm)

CMI212

9.25-inch (235mm)

CMI222

9.45-inch (240mm)

CMI202

9.84-inch (250mm)

CMI221

CMI202-991

Mini-ITX System

Expandable System with IBASE MI991AF Mini-ITX Motherboard

Rear I/O

Features

- 6th Gen Intel® Core™ i7/i5/i3 / Pentium® / Celeron® DT Processors
- Dual-channel memory, up to 32GB DDR4
- 4x DB9, 1x GPIO
- Supports DVI-D, HDMI and DisplayPort
- Removable 2.5" storage (supports RAID 0/1)
- Supports Intel® iAMT(11.0) and TPM(1.2)

Specifications

System Mainboard	MI991AF
CPU Type	6th Gen Intel® Core™ i7/i5/i3 / Pentium® / Celeron® desktop processors
PCH	Intel® Q170
System Speed	i7-6700 (3.4GHz ~4.0 GHz)
Memory	2x 8G DDR4-2400 SO-DIMM, Max.32GB
Front-side Panel I/O	N/A
Rear-side Panel I/O	1x 2-pin DC input for 24V(±10%) 1x 2-pin DC output for 12V(±10%) 1x Power on/off button 1x Reset button 1x Power LED, 1x HDD LED 1x DB9 (for GPIO 4-in & 4-out) 3x RS232 for COM#2~4 (2-ports thru pin header) 1x RS232/422/485 for COM#1 6x USB 3.0 ,2x USB 2.0 2x System fans 2x RJ45, 1x Audio port for Line-in/Line-out/Mic-in 1x SPK Out (6W output) thru ID107 (optional) 1x DVI-D, 1x HDMI, 1x DisplayPort
Storage Interface	2x 2.5" SATA HDD or SSD
Expansion Slots	1x PCI-E (x16) expansion slot Add-on card dimensions: up to 106mm x 200mm
Power Supply	Industrial 250W DC switching power supply Input Voltage: Direct 24V(±10%) DC, 18A
Construction	SECC
Chassis Color	Black
Mounting Type	Wall mount & Dekstop
Dimensions	345mm (W) x 240mm (D) x 100mm (H) 13.5" (W) x 9.44" (D) x 3.93" (H)
Weight	4.4 kg
Operating Temperature	0°C~45°C (32°F~113°F)
Storage Temperature	-20°C~80°C (-4°F~176°F)
Relative Humidity	5% ~ 90% @45C (non-condensing)

Vibration	Non-Operating : 1.0 grms / 5~500Hz / random Operating : 0.25 grms / 5~500Hz / random
Certification	CE / LVD / FCC Class-B (Pre-scan only)

Ordering Information

CMI202-991M	Chassis with MI991AF + IP118 riser card, w/o CPU, HDD, memory, w/ 250W PSU, 2.5" HDD holder, 1x PCI-E(x16) expansion slots (RoHS22)

Dimensions and Drawing

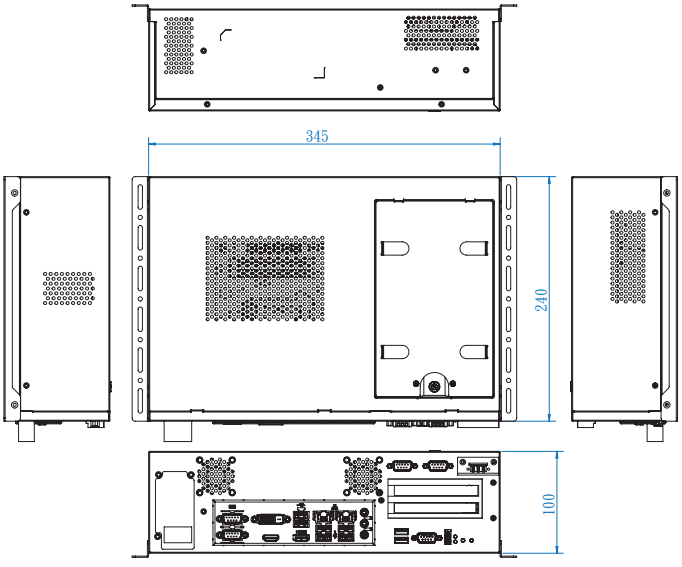

Remarks: 1. Specifications are subject to change without prior notice. 2. ODM/OEM is available. 3. For user's manual & datasheet download, visit www.ibase.com.tw.

CMI221-991

Mini-ITX System

Expandable System with IBASE MI991AF Mini-ITX Motherboard

Rear I/O

Features

- 6th Gen Intel® Core™ i7/i5/i3 / Pentium® / Celeron® DT Processors
- Dual-channel memory, up to 32GB DDR3
- Supports DVI-D,HDMI & DisplayPort
- Removable 2.5" storage (supports RAID 0/1)
- Supports 1x Mini PCI-E, 1x mSATA, 1x PCI-E expansion slot
- Supports Intel® iAMT(11.0) and TPM(1.2)
- Long-term supply

Specifications

System Mainboard	MI991AF
CPU Type	6th Gen Intel® Core™ i7/i5/i3 / Pentium® / Celeron® desktop processors (35W TDP)
PCH	Intel® Q170
System Speed	i7-6700TE (2.4GHz ~ 3.4GHz) i5-6500TE (2.3GHz ~ 3.3GHz)
Memory	2x 8G DDR4-2400 SO-DIMM, Max.32GB
Front-side Panel I/O	1x Power LED1x HDD LED 1x Power On/Off button, 1x Reset button 2x USB 2.0
Rear-side Panel I/O	1x RS-232/422/485 for COM#1 3x RS-232 for COM#2~4 2x RS-232 for COM#5~6 ports(CMI221-991-6COM Series only) 6x USB 3.0 2x GbE LAN 1x DVI-D, 1x HDMI, 1x DP Line-In, Line-Out, Mic-In 4x Digital Input + 4x Digital Output 1x AC power inlet
Storage Interface	1x mSATA 2x 2.5" SATA Drive Bay (2nd storage cable reserved)
Expansion Slots	1x PCI-E (x16) expansion slot Add-on card dimensions: up to 106mm x 200mm
Power Supply	Industrial 250W ATX power supply (80-plus) 100V~240V Input Voltage 50Hz ~ 60Hz Input frequency Compatible with IEC62368-1/EN62368-1
Construction	SECC
Chassis Color	Black
Mounting Type	Desktop or wall mount
Dimensions	300m (W) x 250mm (D) x 72mm (H) 11.81" (W) x 9.84" (D) x 2.83" (H)
Operating Temperature	0°C ~ 45°C (32°F ~ 113°F)
Storage Temperature	-20°C ~ 80°C (-4°F ~ 176°F)
Relative Humidity	5%~90%@45°C (non-condensing)
Vibration	Operating : 0.25Grms / 5~500Hz Non-operating : 1Grms / 5~500Hz
Certification	CE/ FCC Class A/ LVD

Ordering Information

CMI221-991-6COM-I7	Chassis with MI991AF + IP119+ IBD182V, w/ Intel® Core™ i7-6700TE CPU + CPU cooler , 2x 8GB DDR4 memory, 1x 1TB 2.5" SATA HDD, w/ 250W power supply
CMI221-991-6COM-I5	Chassis with MI991AF + IP119+ IBD182V, w/ Intel® Core™ i5-6500TE CPU + CPU cooler ,2x 8GB DDR4 memory, 1x 1TB 2.5" SATA HDD, w/ 250W power supply
CMI221-991M	Chassis with MI991AF + IP119 + CPU cooler, w/o CPU, Storage, memory, w/ 250W power supply 2.5" SSD/HDD holder, 1x PCI-E(x16) expansion

Dimensions and Drawing

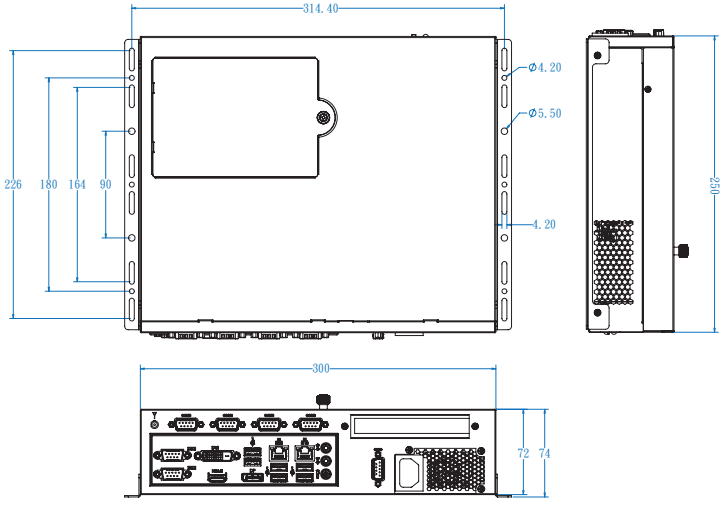

CMI211 System Family

Mini-ITX System

Expandable System with IBASE Mini-ITX Motherboard

NEW

PCI-E (x16)

CMI211-999 / CMI211-992VF-7820 / CMI211-991 / CMI211-990 / CMI211-989

Rear I/O (Based on MI999 & MI992VF-7820 & MI991 & MI990 I/O)

Rear I/O (Based on MI989 I/O)

Specifications

Model		CMI211-999	CMI211-989	CMI211-992VF-7820	CMI211-991	CMI211-990
System	System Mainboard	MI999AF/ MI999EF	MI989F	MI992VF	MI991AF/MI991VF	MI990VF/MI990EF
	Processor	10th Gen Intel® Core™ i7/i5/i3/ Pentium®/ Celeron® desktop processors	AMD Ryzen™ Embedded V2000 series	7th Gen Intel® Core™ i7-7820EQ Processors	6th Gen Intel® Core™ i7/i5/i3/ Pentium®/ Celeron® desktop processors	6th Gen Intel® Core™ i7/i5/i3/ Pentium®/ Celeron® mobile processors
	PCH	MI999AF: Intel® W480E MI999EF: Intel® H420E	AMD integrated SoC	Intel® CM238	MI991AF: Intel® Q170 MI991EF: Intel® H110	MI990VF: Intel® CM236 MI990EF: Intel® HM170
	System Speed	Up to 4.7 GHz	Up to 4.15 GHz	Up to 3.7 GHz	Up to 4.0 GHz	Up to 3.7 GHz
	Memory	2x DDR4-3200 SO-DIMM	2x DDR4-3200 SO-DIMM	2x DDR4 -2400 SO-DIMM	2x DDR4-2133 SO-DIMM	2x DDR4-2133 SO-DIMM
I/O Interface	Front-side Panel I/O	2x USB 2.0 ports 2x Antenna hole		2x USB 2.0 ports		
	Rear-side Panel I/O	1x AC-inlet, 1x Power button 1x Power LED, 1x HDD LED Based on different motherboard I/O ports		1x AC-inlet, 1x Power button 1x Power LED, 1x HDD LED 1x Antenna hole Based on different motherboard I/O ports		
Storage Interface	SATA	1x 2.5" HDD drive bay				
	M.2 / mSATA	1x M.2 (MI999AF only)	1x M.2	1x mSATA	1x mSATA	1x mSATA
Expansion Slots	PCI-E Expansion	1x PCI-E (x16) expansion slot				
	Add-on card Max. Size	111mm(W) x 168mm(D) x 18mm(H)				
Power Supply	ATX Power	Industrial 250W ATX power supply Input voltage: 100V ~ 240V Input frequency: 47Hz ~ 63Hz Compatible with IEC62368-1/EN62368-1				
Mechanical	Construction	SECC				
	Chassis Color	Black				
	Mounting Type	Wall mount & Desktop				
	Dimensions	300m (W) x 205mm (D) x 72mm (H) 11.81" (W) x 8.07" (D) x 2.83" (H)				
	Weight	TBD	TBD	2.91kg	3.1kg	2.8kg
Environmental	Operating Temperature	0°C~45°C (32°F~113°F)				
	Storage Temperature	-20°C~80°C (-4°F~176°F)				
	Humidity	5% ~ 90% @45C (non-condensing)				
	Vibration	Non-Operating : 1.0 grms / 5~500Hz / random Operating : 0.25 grms / 5~500Hz / random				
	Certification	CE / LVD / FCC Class-B (Pre-scan only)	CE / LVD / FCC Class-B			

Remarks: 1. Specifications are subject to change without prior notice. 2. ODM/OEM is available. 3. For user's manual & datasheet download, visit www.ibase.com.tw.

CMI211 System Family

Dimensions and Drawing

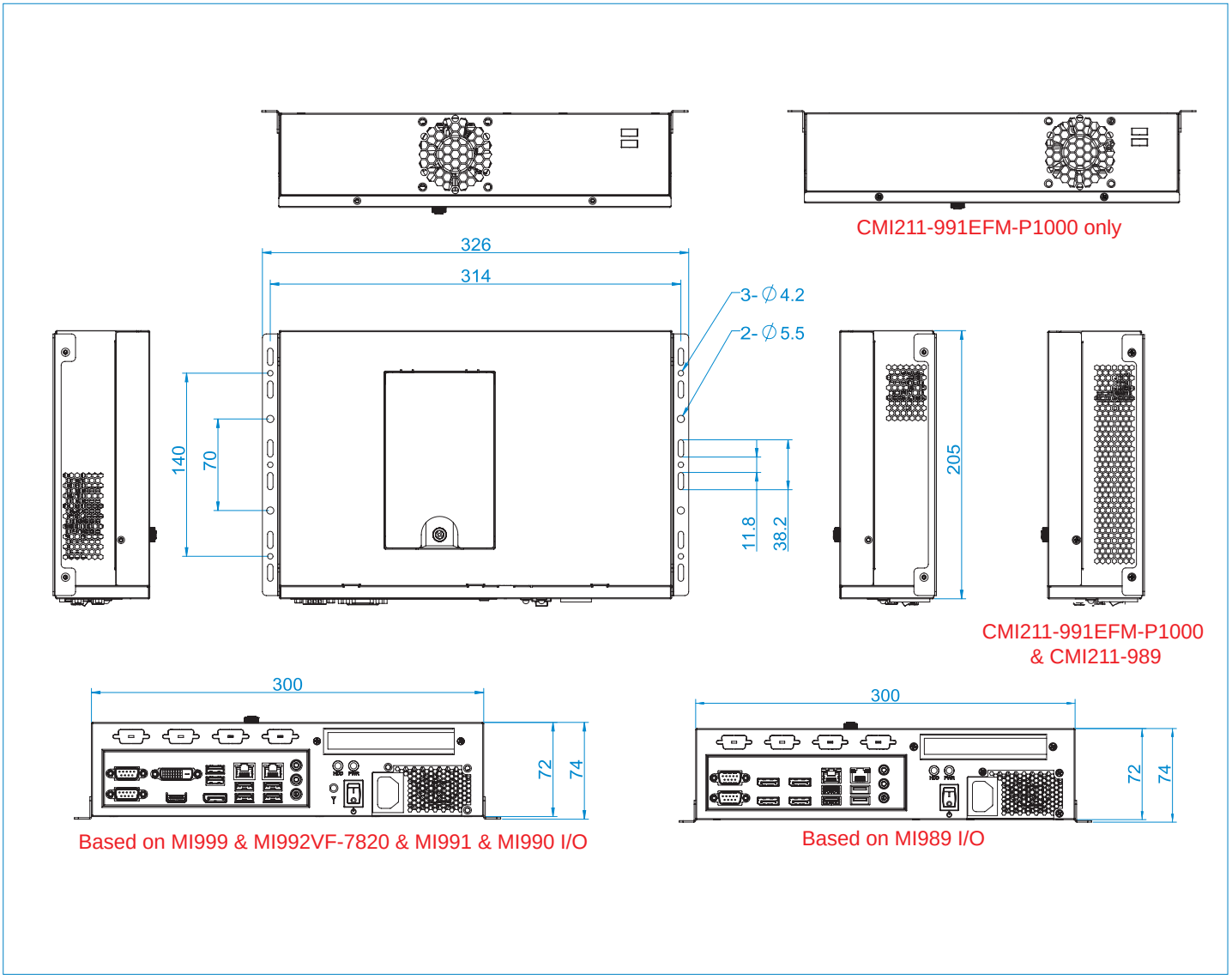

Ordering Information

CMI211-999AFM	Chassis with MI999AFE-W (W480E) + IP119 riser card, w/o HDD, memory, w/ 250W PSU, 2.5" HDD holder, 1x PCI-E (x16) expansion slot (RoHS2)
CMI211-999EFM	Chassis with MI999EFE-H (H420E) + IP119 riser card, w/o HDD, memory, w/ 250W PSU, 2.5" HDD holder, 1x PCI-E (x16) expansion slot (RoHS2)
CMI211-989-2748	Chassis with MI989F-2748 (AMD V2748) + IP119 riser card, w/o HDD, memory, w/ 250W PSU, 2.5" HDD holder, 1x PCI-E (x16) expansion slot (RoHS2)
CMI211-989-2718	Chassis with MI989F-2718 (AMD V2718) + IP119 riser card, w/o HDD, memory, w/ 250W PSU, 2.5" HDD holder, 1x PCI-E (x16) expansion slot (RoHS2)
CMI211-992VF-7820M	Chassis with MI992VF-7820 + IP119 riser card, w/o CPU, HDD, memory, w/ 250W PSU, 2.5" HDD holder, 1x PCI-E (x16) expansion slot (RoHS2)
CMI211-991AFM	Chassis with MI991AF + IP119 riser card, w/o CPU, HDD, memory, w/ 250W PSU, 2.5" HDD holder, 1x PCI-E (x16) expansion slot (RoHS2)
CMI211-991EFM	Chassis with MI991EF + IP119 riser card, w/o CPU, HDD, memory, w/ 250W PSU, 2.5" HDD holder, 1x PCI-E (x16) expansion slot (RoHS2)
CMI211-990-6820M	Chassis with MI990VF-6820E + IP119 riser card, w/o HDD, memory, w/ 250W PSU, 2.5" HDD holder, 1x PCI-E (x16) expansion slot (RoHS2)
CMI211-990-6440M	Chassis with MI990VF-6440E + IP119 riser card, w/o HDD, memory, w/ 250W PSU, 2.5" HDD holder, 1x PCI-E (x16) expansion slot (RoHS2)
CMI211-990-6100M	Chassis with MI990EF-6100E + IP119 riser card, w/o HDD, memory, w/ 250W PSU, 2.5" HDD holder, 1x PCI-E (x16) expansion slot (RoHS2)

CMI212 System Family

Mini-ITX System

Expandable System with IBASE Mini-ITX Motherboard

CMI212-999 / CMI212-991 / CMI212-990

NEW

PCI-E (x8)

PCI-E (x8)

Rear I/O

Specifications

	Model	CMI212-999	CMI212-991	CMI212-990
System	System Mainboard	MI999AFE-Q	MI991AF	MI990VF/MI990EF
	Processor	10th Gen Intel® Core™ i7/i5/i3/ Pentium® / Celeron® desktop processors	6th Gen Intel® Core™ i7/i5/i3/ Pentium® / Celeron® desktop processors	6th Gen Intel® Core™ i7/i5/i3/ Pentium®/ Celeron® mobile processors
	PCH	MI999AFE-Q: Intel® Q470E	Intel® Q170	MI990VF: Intel® CM236 MI990EF: Intel® HM170
	System Speed	Up to 4.8 GHz	Up to 4.0 GHz	Up to 3.7 GHz
	Memory	2x DDR4-2933/2666 SO-DIMM	2x DDR4-2133 SO-DIMM	2x DDR4-2133 SO-DIMM
I/O Interface	Front-side Panel I/O	1x Power LED, 1x HDD LED 1x Power button, 1x reset button 2x USB 2.0 ports		
	Rear side Panel I/O	2x RS232 ports via pin header 2x Antenna hole 1x DC-jack for power input 2x COM DB9 1x DVI 1x HDMI 1x DisplayPort 6x USB 2x LAN RJ45 1x 3-ports audio jack		
Storage Interface	SATA	1x 2.5" HDD drive bay		
	mSATA / M.2	1x M.2	1x mSATA	1x mSATA
Expansion Slots	PCI-E Expansion	2x PCI-E (x16) expansion slots (2x PCI-E (x8) signal)		
	Add-on Card Max. Size	111mm(W) x 185mm(D) x 17mm(H) (For MI990) 111mm(W) x 185mm(D) x 11mm(H) (For MI999/MI991)		
Power Supply	AC Adaptor	330W power adaptor Input voltage: 100V~240V Input frequency: 47Hz~63Hz Output voltage: 12V Output current: 0A to 12.5A Compatible with IEC62368-1/EN62368-1	150W power adaptor Input voltage: 100V~240V Input frequency: 47Hz~63Hz Output voltage: 12V Output current: 0A to 12.5A Compatible with IEC62368-1/EN62368-1	
Mechanical	Construction	SGCC		
	Chassis Color	Black		
	Mounting Type	Wall mount & Desktop		
	Dimensions	198m (W) x 235mm (D) x 118mm (H) 7.8" (W) x 9.25" (D) x 4.65" (H)		
	Weight	3kg	3kg	2.7kg
Environmental	Operating Temperature	0°C~45°C (32°F~113°F)		
	Storage Temperature	-20°C~80°C (-4°F~176°F)		
	Humidity	5% ~ 90% @45C (non-condensing)		
	Vibration	Non-Operating : 1.0 grms / 5~500Hz / random Operating : 0.25 grms / 5~500Hz / random		
	Certification	CE / LVD / FCC Class A (Pre-scan only)		

Remarks: 1. Specifications are subject to change without prior notice. 2. ODM/OEM is available. 3. For user's manual & datasheet download, visit www.ibase.com.tw.

CMI212 System Family

Dimensions and Drawing

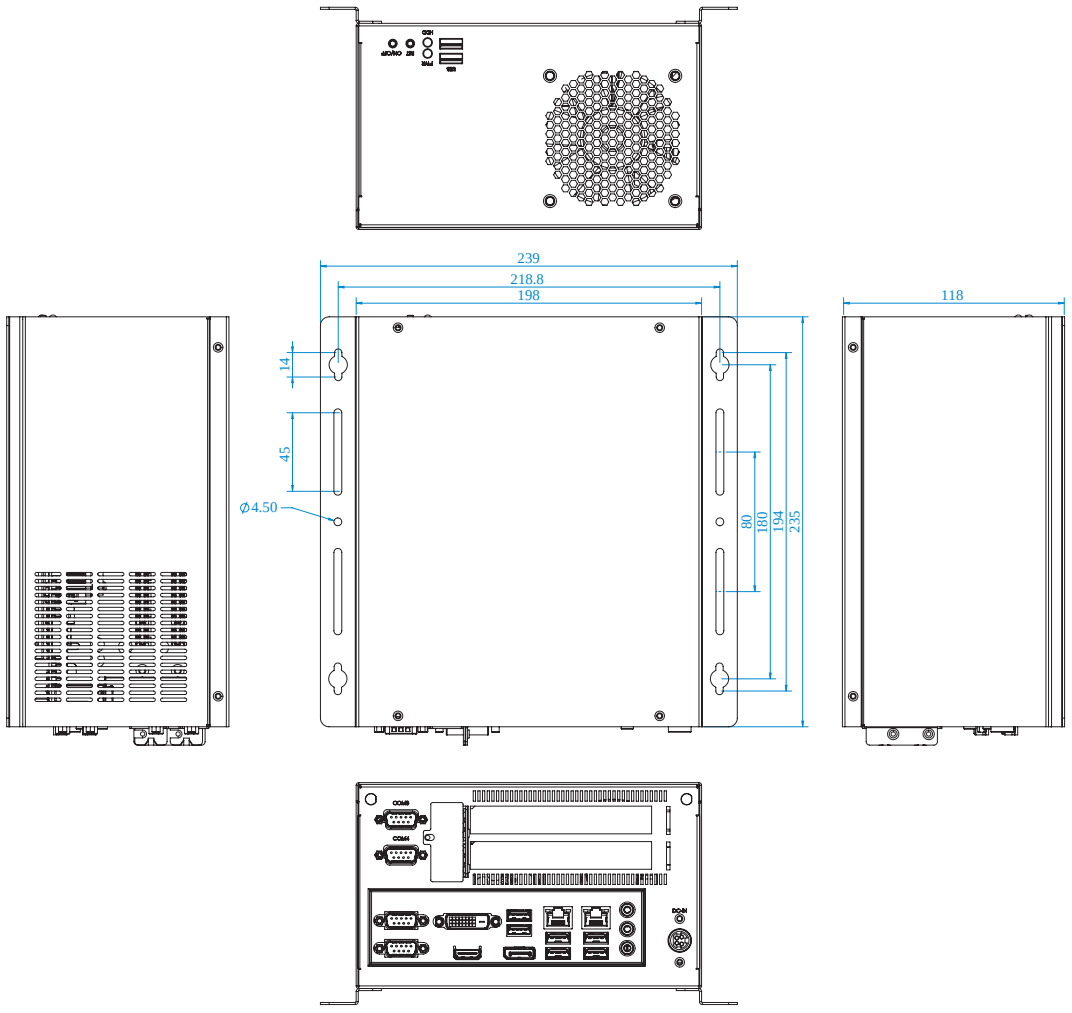

Ordering Information

CMI212-999AFM	Chassis with MI999AFE-Q + IP404 riser card, w/o CPU, HDD, memory, w/ 330W power adaptor, 2.5" HDD holder, 2x PCI-E (x16) expansion slots (with PCI-E (x8) signal) (RoHS2)
CMI212-991AFM	Chassis with MI991AF + IP404 riser card, w/o CPU, HDD, memory, w/ 150W power adaptor, 2.5" HDD holder, 2x PCI-E (x16) expansion slots (with PCI-E (x8) signal) (RoHS2)
CMI212-991EFM	Chassis with MI991EF + IP404 riser card, w/o CPU, HDD, memory, w/ 150W power adaptor, 2.5" HDD holder, 2x PCI-E (x16) expansion slots (with PCI-E (x8) signal) (RoHS2)
CMI212-990-6820M	Chassis with MI990VF-6820 + IP404 riser card, w/o HDD, memory, w/ 150W power adaptor, 2.5" HDD holder, 2x PCI-E (x16) expansion slots (with PCI-E (x8) signal) (RoHS2)
CMI212-990-6440M	Chassis with MI990VF-6440 + IP404 riser card, w/o HDD, memory, w/ 150W power adaptor, 2.5" HDD holder, 2x PCI-E (x16) expansion slots (with PCI-E (x8) signal) (RoHS2)
CMI212-990-6100M	Chassis with MI990EF-6100 + IP404 riser card, w/o HDD, memory, w/ 150W power adaptor, 2.5" HDD holder, 2x PCI-E (x16) expansion slots (with PCI-E (x8) signal) (RoHS2)

CMI222 System Family

Mini-ITX System

Expandable System with IBASE Mini-ITX Motherboard

CMI222-811 / CMI222-808

PCI-E (x1)

PCI

Rear I/O (Based on MI811 I/O)

Rear I/O (Based on MI808 I/O)

Specifications

Model		CMI222-811	CMI222-808
System	System Mainboard	MI880F	MI808F
	Processor	Intel® Pentium® QC N4200 @ 1.1GHz ~ 2.5GHz Intel® Celeron® DC N3350 @ 1.1GHz ~ 2.4GHz	Intel® Pentium® N3710 / Celeron® N3010 Processor
	PCH	N/A	N/A
	System Speed	Up to 2.4 GHz	Up to 2.24 GHz
	Memory	2x DDR3L-1866 SO-DIMM	2x DDR3L-1600 SO-DIMM
I/O Interface	Front side Panel I/O	1x Power LED, 1x HDD LED 1x Power button 2x USB 2.0 ports 8x DB9M ports (reserved hole)	
	Rear side Panel I/O	4x RS232 ports thru pin header 1x Antenna hole 1x 3-pin terminal block for power input or DC-jack type 1x 10-pin terminal block for GPIO (4-in & 4-out) Based on different motherboard I/O ports	
Storage Interface	SATA	1x 2.5" HDD drive bay	
	mSATA	1x mSATA	1x mSATA
Expansion Slots	PCI-E Expansion	2x PCI slot (IP245 riser card), 1x PCI + 1x PCI-E (x1) slots (IP246 riser card)	
	Add-on Card Max. Size	111mm(W) x 168mm(D) x 17mm(H) (for PCI-E card) 106mm(W) x 175mm(D) x 17mm(H) (for PCI card)	
Power	AC Adaptor	84W power adaptor Input voltage: 90V~264V Input frequency: 47Hz~63Hz Output voltage: 12V Output current: 0A to 7A Compatible with IEC62368-1/EN62368-1	
Mechanical	Construction	SECC	
	Chassis Color	Black	
	Mounting Type	Wall mount & Desktop	
	Dimensions	300mm (W) x 235mm (D) x 83mm (H) 11.81" (W) x 9.25" (D) x 3.27" (H)	
	Weight	2.6kg	2.6kg
Environmental	Operating Temperature	0°C~45°C (32°F~113°F)	
	Storage Temperature	-20°C~80°C (-4°F~176°F)	
	Humidity	5% ~ 90% @45C (non-condensing)	
	Vibration	Non-Operating : 1.0 grms / 5~500Hz / random Operating : 0.25 grms / 5~500Hz / random	
	Certification	CE / LVD / FCC Class-B (Pre-scan only)	

Remarks: 1. Specifications are subject to change without prior notice. 2. ODM/OEM is available. 3. For user's manual & datasheet download, visit www.ibase.com.tw.

CMI222 System Family

Dimensions and Drawing

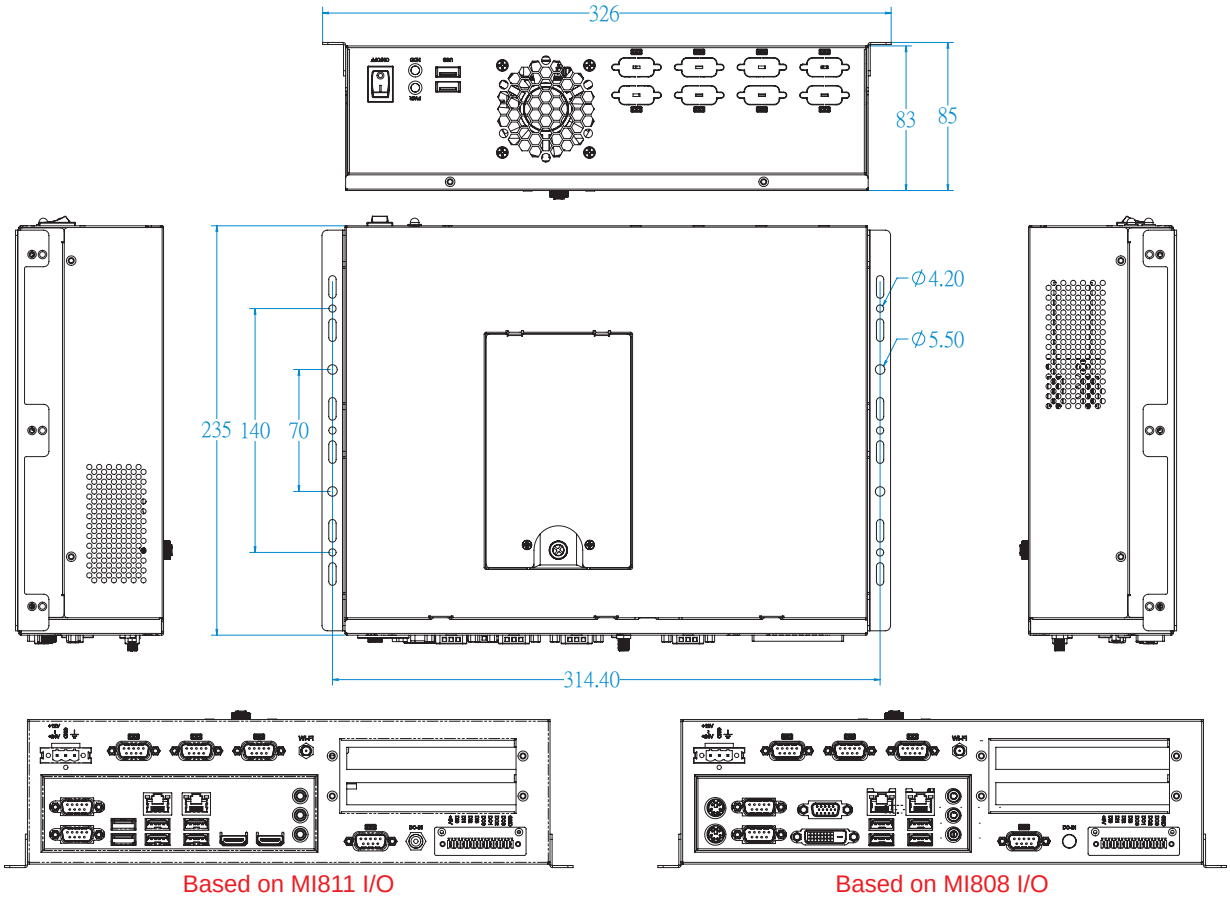

Ordering Information

CMI222-808M-371	Chassis with MI808F-371 + IP246 riser card, w/o HDD, memory, w/ 84W PSU, 2.5" HDD holder, 1x PCI-E (x1) + 1x PCI expansion slot (RoHS2)
CMI222-808M-301	Chassis with MI808F-301 + IP246 riser card, w/o HDD, memory, w/ 84W PSU, 2.5" HDD holder, 1x PCI-E (x1) + 1x PCI expansion slot (RoHS2)
CMI222-811M-420	Chassis with MI811F-420D + IP246 riser card, w/o HDD, memory, 84W PSU, w/ 2.5" HDD holder, 1x PCI-E (x1) + 1x PCI expansion slot (RoHS2)
CMI222-811M-335	Chassis with MI811F-335D + IP246 riser card, w/o HDD, memory, 84W PSU, w/ 2.5" HDD holder, 1x PCI-E (x1) + 1x PCI expansion slot (RoHS2)

CMI300-988

Mini-ITX System

Fanless System with IBASE MI988F Mini-ITX Motherboard

Rear I/O

Features

- AMD Ryzen™ Embedded V1807B on board
- Dual-channel memory, up to 32GB DDR4
- Supports HDMI & DisplayPort
- 2x Gigabit Ethernet, 4x USB 3.1, 4x COM
- Wall mount kit included, optional VESA mount kit
- 1x Mini PCI-E socket, 1x M.2 (M-key)

Specifications

System Mainboard	MI988F
CPU Type	AMD Ryzen™ Embedded V1000 Series
PCH	N/A
System Speed	Up to 3.8GHz
Memory	2x 4GB DDR4 SO-DIMM, Max. 32GB
Front-side Panel I/O	2x Antenna hole reserved Power button
Rear-side Panel I/O	2x RS232/422/485 for COM#1~#2 2x RS232 for COM#3~#4 4x USB 3.1 ports 2x RJ-45 Gigabit Ethernet port 1x HDMI+DisplayPort 1x Audio port for [Line-in / Line-out / Mic-in] 1x Antenna hole reserved
Storage Interface	1x 2.5" SSD
Expansion Slots	1x Mini PCI-E socket, 1x M.2 (M Key:2280)
Power Supply	84W power adaptor
Construction	Aluminum & steel
Chassis Color	Black
Mounting Type	Desktop or wall mount bracket Optional VESA mount kit
Dimensions	200mm (W) x 200mm (D) x 62mm (H) 7.87" (W) x 7.87" (D) x 2.44" (H)
Weight	1.8kg

Operating Temperature	0°C~45°C (32°F~113°F)
Storage Temperature	-20°C~80°C (-4°F~176°F)
Relative Humidity	5%~90%@45°C (non-condensing)
Vibration	Operating: 0.25Grms / 5~500Hz Non-operating: 1Grms / 5~500Hz
Certification	CE/FCC Class A

Ordering Information

CMI300-988-1807	Embedded System with MI988F-1807 (AMD V1807B 3.35/3.8GHz on board), w/ 128GB 2.5" SSD, 1x 4GB DDR4 memory, 84W power adaptor (RoHS2) Compatible with IEC62368-1/EN62368-1
CMI300-988-1605	Embedded System with MI988F-1605 (AMD V1605B 2.0/3.6GHz on board), w/ 128GB 2.5" SSD, 1x 4GB DDR4 memory, 84W power adaptor (RoHS2) Compatible with IEC62368-1/EN62368-1

Remarks: 1. Specifications are subject to change without prior notice. 2. ODM/OEM is available. 3. For user's manual & datasheet download, visit www.ibase.com.tw.

Dimensions and Drawing

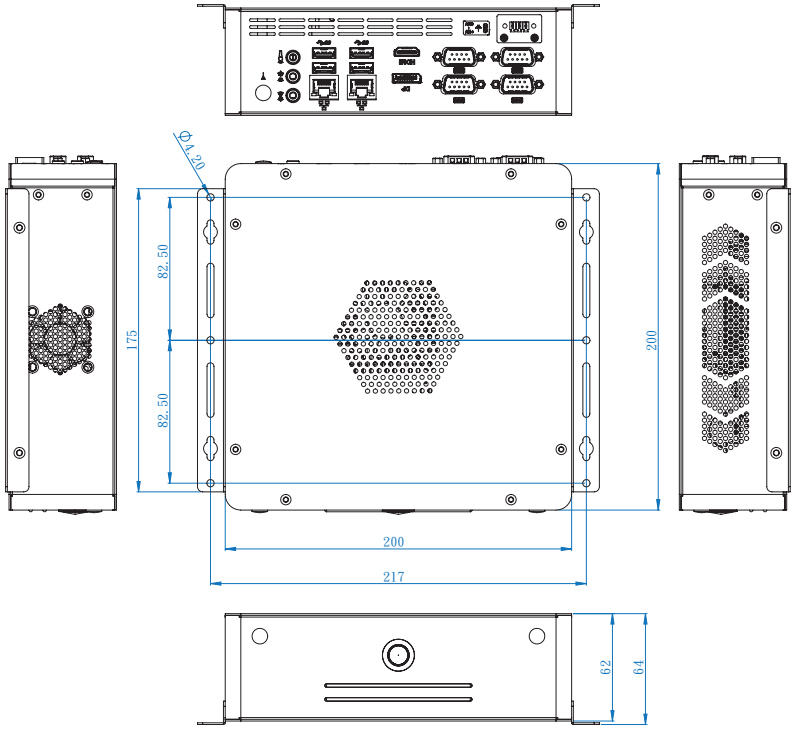

Wall Mounting

Optional VESA Mount Kit

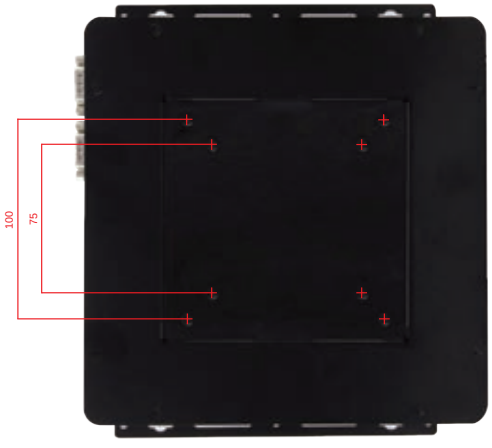

ASB200-915

SBC Fanless System

Fanless System with IBASE IB915 3.5" Single Board Computer

Rear I/O

Features

- Fanless system with IBASE IB915 3.5" Single Board Computer
- Onboard 6th Gen Intel® Core™ U-series Processor
- iSMART- for auto-scheduler and power resume
- 12V(-10%) ~ 24V(+10%) DC wide-range power input
- Supports 1x Mini PCI-E (full-size)
- Supports 1x 2.5" SATA HDD
- 1x USB 3.1 port (Type-C), 4x USB 3.0 ports
- Wall mount kit included

Specifications

System Mainboard	IB915AF-6600 / IB915AF-6300 / IB915AF-6100
CPU Type	Intel® Core™ i7 6600U Processor Intel® Core™ i5 6300U Processor Intel® Core™ i3 6100U Processor
System Speed	2.6GHz / 2.4GHz / 2.3GHz
Memory	2x 2GB DDR3L-1600 SO-DIMM Memory, Max.16GB
Front Panel External I/O	1x Power button 2x USB 2.0 1x Audio jack for Line-out / Line-in / MIC-in 1x HDD LED 1x Digital I/O (4-in / 4-out)
Rear Panel External I/O	1x COM thru RJ50 connector (RS-232/422/485) 3x COM (RS232) 4x USB 3.0 ports 1x USB 3.1 port (Type-C) 1x DisplayPort 2x RJ-45 GbE connector 1x 3-pin DC-in terminal block for 12V(-10%)~24V(+10%)
Expansion Slots	1x Full-size Mini PCI-E socket
Storage	1x 2.5" HDD or SSD
Construction	Aluminum & Steel
Chassis Color	Black
Mounting Type	Desktop or wall mount (wall mount kit included) Optional VESA mount kit
Dimensions	180mm (W) x 150mm (D) x 66mm (H) 7.09" (W) x 5.91" (D) x 2.6" (H)
Weight	1.8kg
Operating Temperature	0°C~40°C (32°F~104°F) (With HDD) -10°C~50°C (14°F~122°F) (With SSD)
Storage Temperature	-20°C ~ 80°C (-4°F~176°F)
Relative Humidity	5~90% @ 45°C, (non-condensing)
Vibration	Operating : 0.25Grms / 5~500Hz Non-operating : 1Grms / 5~500Hz
Shock	Operating : 20G / 11ms Non-operating : 40G / 11ms
Certification	CE / LVD / FCC Class-B

Ordering Information

ASB200-915-i7	Fanless chassis with IB915AF-6600, Intel® i7-6600U 2.6GHz CPU, 4x COM, 2x 2GB DDR3L memory, 1x 2.5" 64GB MLC SSD, supports iAMT11.0, w/o 90W power adaptor and VESA mount bracket
ASB200-915-i5	Fanless chassis with IB915AF-6300, Intel® i5-6300U 2.4GHz CPU, 4x COM, 2x 2GB DDR3L memory, 1x 2.5" 64GB MLC SSD, supports iAMT11.0, w/o 90W power adaptor and VESA mount bracket
ASB200-915-i3	Fanless chassis with IB915F-6100, Intel® i3-6100U 2.3GHz CPU, 4x COM, 2x 2GB DDR3L memory, 1x 2.5" 64GB MLC SSD, w/o 90W power adaptor and VESA mount bracket
ASB200-915-i7-DC	Fanless chassis with IB915AF-6600, Intel® i7-6600U 2.6GHz CPU, 4x COM, 2x 2GB DDR3L memory, 1x 2.5" 64GB MLC SSD, 1x90W power adaptor, supports iAMT11.0, w/o VESA mount bracket
ASB200-915-i5-DC	Fanless chassis with IB915AF-6300, Intel® i5-6300U 2.4GHz CPU, 4x COM, 2x 2GB DDR3L memory, 1x 2.5" 64GB MLC SSD, 1x 90W power adaptor, supports iAMT11.0, w/o VESA mount bracket
ASB200-915-i3-DC	Fanless chassis with IB915F-6100, Intel® i3-6100U 2.3GHz CPU, 4x COM, 2x 2GB DDR3L memory, 1x 2.5" 64GB MLC SSD, 1x 90W power adaptor, w/o VESA mount bracket
90W power adaptor (optional)	90W (24V @3.75) power adaptor, DC-jack or bare wire type, Compatible with IEC62368-1/EN62368-1

Dimensions and Drawing

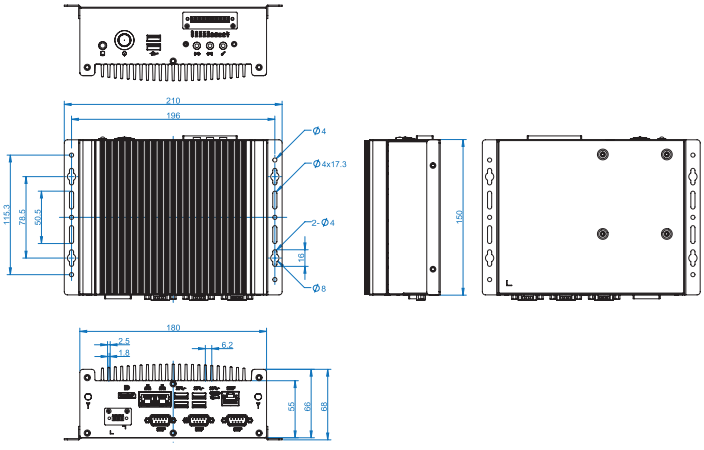

iBASE

Remarks: 1. Specifications are subject to change without prior notice. 2. ODM/OEM is available. 3. For user's manual & datasheet download, visit www.ibase.com.tw.

ASB200-916

SBC Fanless System

Fanless System with IBASE IB916 3.5" Single Board Computer

Rear I/O

Features

- Fanless system with IBASE IB916 3.5" Single Board Computer
- Onboard 6th Gen Intel® Core™ U-series Processor
- iSMART- for auto-scheduler and power resume
- 12V(-10%) ~ 24V(+10%) DC wide-range power input
- Supports 1x Mini PCI-E (full-size)
- Supports 1x 2.5" SATA HDD
- 4x USB 3.0, DP/HDMI, 1x DisplayPort
- Wall mount kit included

Specifications

System Mainboard	IB916AF-7600 / IB916AF-7300 / IB916F-7100
CPU Type	Intel® Core™ i7 7600U Processor Intel® Core™ i5 7300U Processor Intel® Core™ i3 7100U Processor
System Speed	Up to 2.8GHz
Memory	2x 4GB DDR4-2133 SO-DIMM, Max.32GB
Front Panel External I/O	1x Power button 2x USB 2.0 1x Audio jack for Line-out / Line-in / MIC-in 1x HDD LED 1x Digital I/O (4-in / 4-out)
Rear Panel External I/O	4x USB 3.0 port 1x HDMI, 1x DisplayPort 1x RS232/422/485 port for COM#1 3x RS232 ports for COM#2/COM#3/ COM#4 2x RJ45 Gigabit Ethernet port 1x 3-pin DC-in terminal block for 12V(-10%)~24V(+10%)
Expansion Slots	1x Full-size Mini PCI-E socket (USB 2.0 + SATA)
Storage	1x 2.5" HDD or SSD
Construction	Aluminum & steel
Chassis Color	Black
Mounting Type	Desktop or wall mount (wall mount kit included) Optional VESA mount kit
Dimensions	180mm (W) x 150mm (D) x 66mm (H) 7.09" (W) x 5.91" (D) x 2.6" (H)
Weight	1.8kg
Operating Temperature	0°C~45°C (32°F~113°F) (With HDD) -20°C~60°C (-4°F~140°F) (With SSD)
Storage Temperature	-20°C to 80°C (-4°F to 176°F)
Relative Humidity	5~90% @ 45°C, (non-condensing)
Vibration	Operating : 0.25Grms / 5~500Hz Non-operating : 1Grms / 5~500Hz
Shock	Operating : 20G / 11ms Non-operating : 40G / 11ms
Certification	CE / LVD / FCC Class-B

Ordering Information

ASB200-916-i7	Fanless chassis with IB916AF-7600, Intel® i7-7600U 2.8GHz CPU, 4x COM, 2x 4GB DDR4 memory, 1x 2.5" 64GB MLC SSD, w/o 90W power adaptor and VESA mount bracket
ASB200-916-i5	Fanless chassis with IB916AF-7300, Intel® i5-7300U 2.6GHz CPU, 4x COM, 2x 4GB DDR4 memory, 1x 2.5" 64GB MLC SSD, w/o 90W power adaptor and VESA mount bracket
ASB200-916-i3	Fanless chassis with IB916F-7100, Intel® i3-7100U 2.4GHz CPU, 4x COM, 2x 4GB DDR4 memory, 1x 2.5" 64GB MLC SSD, w/o 90W power adaptor and VESA mount bracket
90W power adaptor (optional)	90W (24V @3.75) power adaptor, DC-jack or bare wire type, Compatible with IEC62368-1/EN62368-1
Optional Accessories	WiFi/BT antenna kit

Dimensions and Drawing

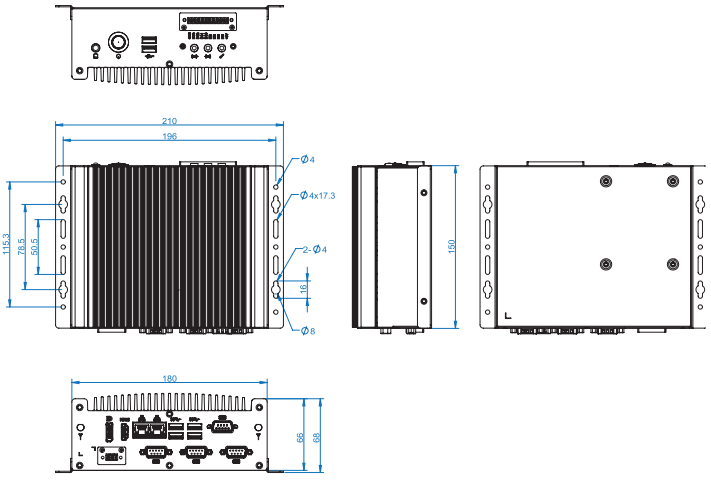

ASB200-918

SBC Fanless System

Fanless System with IBASE IB918 3.5" Single Board Computer

Rear I/O

Features

- Fanless system with IBASE IB918 3.5" Single Board Computer
- Onboard AMD Ryzen™ Embedded V1000 /R1000
- 2x DDR4 SO-DIMM, Max. 32GB, supports ECC
- Supports 2x M.2 sockets (E-Key / M-Key, NVMe)
- 12V(-10%) ~ 24V(+10%) DC-in power Input
- 2x HDMI (2.0a), 2x Intel® Gigabit LAN
- 4x COM ports, External GPIO
- 4x USB3.1, 1x USB 2.0

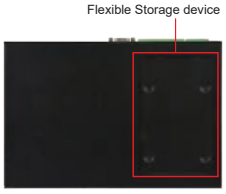

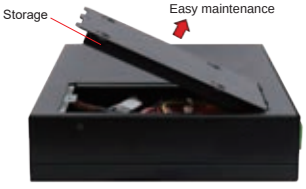

Specifications

System Mainboard	IB918F-1605 /IB918F-1202 /IB918F-1606G / IB918F-1505G
CPU Type	AMD Embedded Ryzen™ Series SoC V1605B/ V1202B/ R1606G/ R1505G
System Speed	Up to 3.6GHz
Memory	2x 8GB DDR4-2666 SO-DIMM Max.32GB, supports ECC
Front Panel External I/O	1x Audio Jack for Line-out/ Line-in/ MIC-in 1x Power LED/ 1x HDD LED/ 1x RST button/ 1x On/Off button 1x USB 3.0/2.0 by V1605B/ V1202B/ R1606G/ R1505G 3x DB9 for COM#2~4 (RS232)
Rear Panel External I/O	4 x USB 3.1 2x HDMI (2.0a) 1x DB9 for COM#1 (RS232/422/485) 2x LAN 1x Digital I/O (4-in/4-out) 1x 3-pin DC-in terminal block for 12V(-10%) ~ 24V(+10%) 2x Antenna holes
Expansion Slots	2x M.2 (E-Key / M-Key)
Storage	1x 2.5" HDD or SSD
Construction	Aluminum & steel
Chassis Color	Black
Mounting Type	Desktop or wall mount (wall mount kit included)
Dimensions	240mm (W) x 162mm (D) x 42mm (H) 9.44" (W) x 6.37" (D) x 1.65" (H)
Weight	1.7kg
Operating Temperature	0°C~45°C (32°F~113°F)
Storage Temperature	-20°C ~80°C (-4°F~176°F)
Relative Humidity	5%~90%@45°C (non-condensing)
Vibration	Operating : 3Grms / 5~500Hz
Shock	Operating : 20G / 11ms Non-operating : 40G / 11ms
Certification	CE/LVD/FCC Class-B

Ordering Information

ASB200-918-1605	Fanless chassis with IB918F-1605, AMD Ryzen™ Embedded V1605B QC APU 2.0GHz, 4x COM, 2x 8GB DDR4 memory, 1x 2.5" SATAIII 64GB TLC SSD, w/o 90W power adaptor
ASB200-918-1202	Fanless chassis with IB918F-1202, AMD Ryzen™ Embedded V1202B DC APU 2.3GHz, 4x COM, 2x 8GB DDR4 memory, 1x 2.5" SATAIII 64GB TLC SSD, w/o 90W power adaptor
ASB200-918-1606G	Fanless chassis with IB918F-1606G, AMD Ryzen™ Embedded R1606G DC APU 2.6GHz, 4x COM, 2x 8GB DDR4 memory, 1x 2.5" SATAIII 64GB TLC SSD, w/o 90W power adaptor
ASB200-918-1505G	Fanless chassis with IB918F-1505G, AMD Ryzen™ Embedded R1505G DC APU 2.4GHz, 4x COM, 2x 8GB DDR4 memory, 1x 2.5" SATAIII 64GB TLC SSD, w/o 90W power adaptor
90W power adaptor (optional)	90W (24V@3.75) power adaptor, DC-jack or bare wire type, Compatible with IEC62368-1/EN62368-1

Dimensions and Drawing

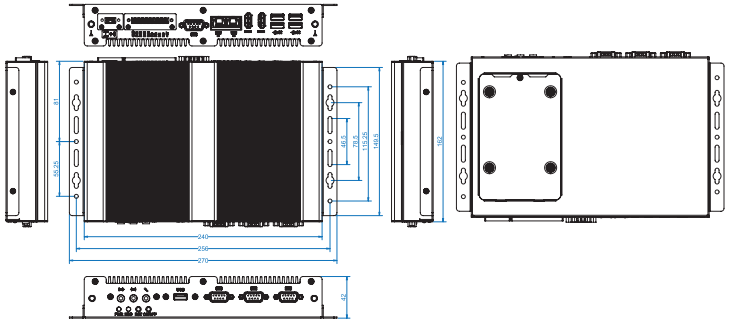

Remarks: 1. Specifications are subject to change without prior notice. 2. ODM/OEM is available. 3. For user's manual & datasheet download, visit www.ibase.com.tw.

ASB200-919

SBC Fanless System

Fanless System with IBASE IB919 3.5" Single Board Computer

Rear I/O

Features

- Fanless system with IBASE IB919 3.5" Single Board Computer
- Onboard 8th Gen Intel® Core™ U-Series Processor
- Supports 2x M.2 sockets (E-Key, CNVi / M-Key, NVMe)
- 12V(-10%) ~ 24V(+10%) DC-in power Input
- 2x DDR4 SO-DIMM, Max.32GB
- 4x USB 3.1, 2x Intel® Gigabit LAN
- 1x COM ports, External GPIO
- 2x DisplayPort (1x by Type-C), TPM (2.0)
- Optional VESA mount bracket

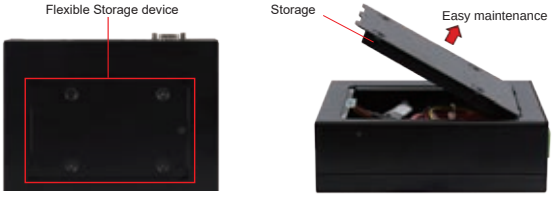

Specifications

System Mainboard	IB919AF-8665/ IB919AF-8365/ IB919EF-8145/ IB919EF-4305
CPU Type	Intel® Core™ i7 8665UE Processor Intel® Core™ i5 8365UE Processor Intel® Core™ i3 8145UE Processor Intel® Celeron® 4305UE Processor
System Speed	Up to 4.4GHz
Memory	2x 8GB DDR4-2666 SO-DIMM, Max.32GB
Front Panel External I/O	4x USB 3.1 2x DP 1x DB9 for COM#1 (RS232/422/485) 2x LAN
Rear Panel External I/O	1x Power button 1x Digital I/O (4-in/4-out) 2x Antenna holes 1x HDD LED 1x 3-pin DC-in terminal block for 12V(-10%) ~ 24V(+10%)
Expansion Slots	2x M.2 (E-Key, M-Key)
Storage	1x 2.5" HDD or SSD
Construction	Aluminum & steel
Chassis Color	Black
Mounting Type	Desktop or wall mount (wall mount kit included) Optional VESA mount kit
Dimensions	180mm (W) x 150mm (D) x 66mm (H) 7.08" (W) x 5.9" (D) x 2.6" (H)
Weight	1.5kg
Operating Temperature	0°C~45°C (32°F~113°F) *with airflow 0.9m/s
Storage Temperature	-20°C ~80°C (-4°F~176°F)
Relative Humidity	5%~90%@45°C (non-condensing)
Vibration	Operating: 3Grms / 5~500Hz
Shock	Operating : 20G / 11ms Non-operating : 40G / 11ms
Certification	CE/LVD/FCC Class-B

Ordering Information

ASB200-919-i7	Fanless chassis with IB919AF-8665, Intel® i7-8665UE 1.7GHz CPU, 1x COM, 2x 8GB DDR4 memory, 1x 2.5" SATAIII 64GB TLC SSD, w/o 90W power adaptor and VESA mount bracket
ASB200-919-i5	Fanless chassis with IB919AF-8365, Intel® i5-8365UE 1.6GHz CPU, 1x COM, 2x 8GB DDR4 memory, 1x 2.5" SATAIII 64GB TLC SSD, w/o 90W power adaptor and VESA mount bracket
ASB200-919-i3	Fanless chassis with IB919EF-8145, Intel® i3-8145UE 2.2GHz CPU, 1x COM, 2x 8GB DDR4 memory, 1x 2.5" SATAIII 64GB TLC SSD, w/o 90W power adaptor and VESA mount bracket
ASB200-919-CEL	Fanless chassis with IB919EF-4305, Intel® Celeron® 4305UE 2.0GHz CPU, 1x COM, 2x 8GB DDR4 memory, 1x 2.5" SATAIII 64GB TLC SSD, w/o 90W power adaptor and VESA mount bracket
90W power adaptor (optional)	90W (24V@3.75A) power adaptor, DC-jack or bare wire type compatible with IEC62368-1/EN62368-1
SC2ASB2----0A1100R	WiFi antenna kit

Dimensions and Drawing

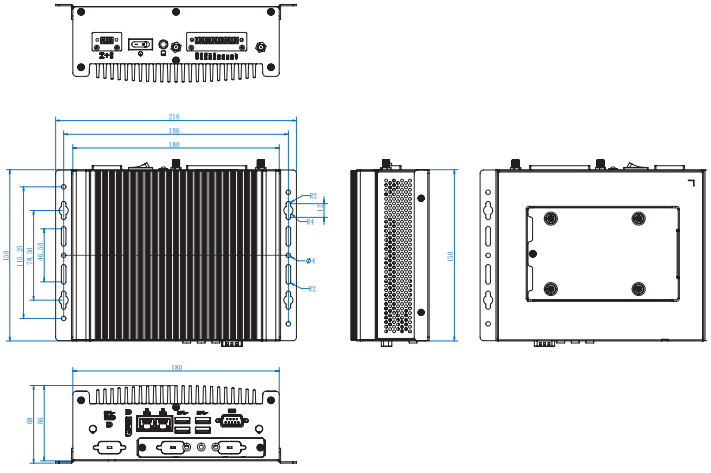

ASB200-953

SBC Fanless System

Fanless System with IBASE IB953 3.5" Single Board Computer

Rear I/O

Features

- Fanless system with IBASE IB953 3.5" Single Board Computer (TDP 15W)
- Onboard 11th Gen Intel® Core™ U-Series Processor
- Supports 3x M.2 sockets (B-Key/E-Key and M-Key)
- 12V (-10%) ~ 24V (+10%) DC-in power input
- 2x DDR4-3200 SO-DIMM, Max. 64GB
- 3x USB 3.1, 1x USB 2.0, 2x Intel® GbE, 1x COM
- External GPIO, 2x DisplayPort, TPM (2.0)
- Optional VESA mount bracket

Specifications

System Mainboard	IB953AF-i7/ IB953AF-i5/ IB953EF-i3/ IB953EF-CEL
CPU Type	Intel® Core™ i7-1185G7E Processor Intel® Core™ i5-1145G7E Processor Intel® Core™ i3-1115G4E Processor Intel® Celeron® 6305E Processor
System Speed	Up to 4.4GHz
Memory	2x DDR4-3200 SO-DIMM, Max. 64GB
Front Panel External I/O	3x USB 3.1 1x USB 2.0 2x DisplayPort 1x DB9 for COM#1 (RS232/422/485) 2x Gigabit LAN
Rear Panel External I/O	1x Power button 1x Digital I/O (4-in/4-out) 2x Antenna holes 1x HDD LED 1x 3-pin DC-in terminal block for 12V (-10%) ~ 24V (+10%)
Expansion Slots	2x M.2 sockets (B-Key/ E-Key)
Storage	1x M.2 M-key 2280, Supports NVMe, PCI-E(4x) only
Construction	Aluminum & steel
Chassis Color	Black
Mounting Type	Desktop or wall mount (wall mount kit included) Optional VESA mount kit
Dimensions	180mm (W) x 150mm (D) x 72mm (H) 7.08" (W) x 5.9" (D) x 2.83" (H)
Weight	1.5kg
Operating Temperature	0°C~45°C (32°F~113°F) *with airflow 0.9m/s
Storage Temperature	-20°C ~80°C (-4°F~176°F)
Relative Humidity	5%~90%@45°C (non-condensing)
Vibration	Operating: 3Grms / 5~500Hz
Shock	Operating : 20G / 11ms Non-operating : 40G / 11ms
Certification	CE/LVD/FCC Class-B

Ordering Information

ASB200-953-i7M	Fanless chassis with IB953AF-i7, Intel® i7-1185G7E CPU, 1x COM, 2x DDR4 memory slot, 1x 2.5" SSD slot, desktop stand & mounting bracket, w/o memory/ SSD/ 90W power adaptor and VESA mount bracket
ASB200-953-i5M	Fanless chassis with IB953AF-i5, Intel® i5-1145G7E CPU, 1x COM, 2x DDR4 memory slot, 1x 2.5" SSD slot, desktop stand & mounting bracket, w/o memory/ SSD/ 90W power adaptor and VESA mount bracket
ASB200-953-i3M	Fanless chassis with IB953EF-i3, Intel® i3-1115G4E CPU, 1x COM, 2x DDR4 memory slot, 1x 2.5" SSD slot, desktop stand & mounting bracket, w/o memory/ SSD/ 90W power adaptor and VESA mount bracket
ASB200-953-CEL-M	Fanless chassis with IB953EF-CEL, Intel® Celeron® 6305E CPU, 1x COM, 2x DDR4 memory slot, 1x 2.5" SSD slot, desktop stand & mounting bracket, w/o memory/ SSD/ 90W power adaptor and VESA mount bracket
90W power adaptor (optional)	90W (24V@3.75A) power adaptor, bare wire type compatible with IEC62368-1/EN62368-1 [PN: A005PS090W0100700P]
Optional Accessories	VESA mount kit [PN: SC2ASB2----0A1200R] WiFi antenna kit [PN: A024MDWiFi0042400P (Intel® 9260) + SC2WiFi----A10M00R (WiFi Kit)]

Dimensions and Drawing

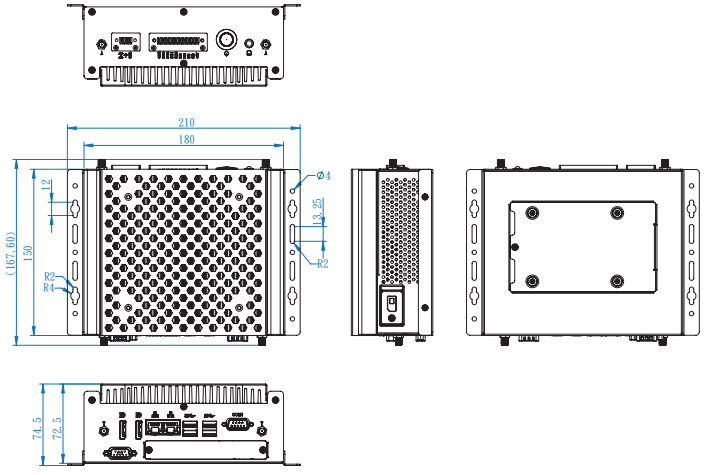

Remarks: 1. Specifications are subject to change without prior notice. 2. ODM/OEM is available. 3. For user's manual & datasheet download, visit www.ibase.com.tw.

ASB200-837

SBC Fanless System

Fanless System with IBASE IB837 3.5" Single Board Computer

Features

- Fanless system with IBASE IB837 3.5" Single Board Computer
- Onboard Intel® Celeron® N6210/ J6412 Processor
- Supports 2x M.2 (E-Key/ B-Key), 1x MiniPCI-E(Full-sized)
- 1x DDR4 SO-DIMM, Max.16GB
- 4x USB3.1, 2x Intel 2.5G LAN
- 1x DisplayPort
- 12V DC power input
- Option VESA mount bracket

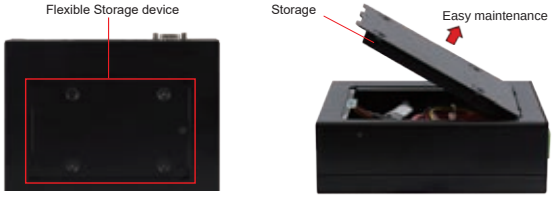

Specifications

System Mainboard	IB837F-N6210/ UB837F-J6412
CPU Type	Intel® Celeron® N6210 & Celeron® J6412 Series
System Speed	Up to 2.6GHz
Memory	1x DDR4-3200 SO-DIMM, Max. 16GB
Front Panel External I/O	4x USB 3.1 port 1x DisplayPort 2x 2.5G LAN 1x DP9 for RS232/422/485 port for COM#1
Rear Panel External I/O	1x Power button 1x Digital I/O (4-in/4-Out) 2x Antenna holes 1x HDD LED 1x 3-pin DC-in terminal block type for 12V
Expansion Slots	1x Full-size Mini PCI-E socket (USB 2.0 + SATA+PCI-E(1x)) 1x M.2 E-Key 2230 1x M.2 B-Key 3042
Storage	1x 2.5" HDD or SSD (Removable)
Construction	Aluminum & steel
Chassis Color	Black
Mounting Type	Desktop or wall mount (wall mount kit included) Optional VESA mount kit
Dimensions	180mm (W) x 150mm (D) x 66mm (H) 7.08"(W) x 5.99"(D) x 2.6"(H)
Weight	TBD
Operating Temperature	0°C~45°C (32°F~113°F) with airflow 0.9m/s
Storage Temperature	-20°C ~ 85°C (-4°F~176°F)
Relative Humidity	5~90% @ 45°C, (non-condensing)
Vibration	Operatiing: 3.0 grms / 5~500Hz
Shock	Operating : 20G/11 ms Non-operating: 40G/11 ms
Certification	CE / LVD / FCC Class-B

Ordering Information

CSB200-837-N6210M	Fanless system with IB837-N6210 w/ Intel® Celeron® N6210, 1x COM, 1x DDR4 memory slot, w/o power adaptor and VESA mount bracket
CSB200-837-J6412M	Fanless system with IB837-J6412 w/ Intel® Celeron® J6412, 1x COM, 1x DDR4 memory slot, w/o power adaptor and VESA mount bracket

ASB200-838

SBC Fanless System

Slim System with IBASE IB838 3.5" Single Board Computer

Features

- Fanless system with IBASE IB838 3.5'' Single Board Computer
- Onboard Intel® Atom N-series Processor
- Supports 2x M.2 sockets (B-Key/ E-Key)
- 9V ~ 36V DC Wide-Range power input
- 1x DDR5 SO-DIMM, Max.16 GB
- 2x USB 3.1+ 1x USB 3.0(Type-C), 2x Intel® 2.5 Gigabit LAN
- 1x DisplayPort, fTPM
- Wall mount kit included

Specifications

System Mainboard	IB838F
CPU Type	Intel® Atom® N-Series
System Speed	Up to 1.25GHz
Memory	1x DDR5-4800 SO-DIMM, Max.16GB
Front Panel External I/O	1x Power button 1x Digital I/O (4-in/4-out) 2x USB 2.0 1x HDD LED 1x 3-pin DC-in terminal block for 12V(-10%) ~ 24V(+10%)
Rear Panel External I/O	2x USB 3.1 1x USB 3.0 (Type-C) 1x DisplayPort 1x DB9 for COM#1 (RS232/422/485) 3x DB9 for COM#2~COM#4 (RS232) 2x 2.5G LAN
Expansion Slots	2x M.2 sockets (B-Key/ E-Key)
Storage	1x 2.5" HDD or SSD
Construction	Aluminum & steel
Chassis Color	Black
Mounting Type	Desktop or wall mount (wall mount kit included) Optional VESA mount kit
Dimensions	180mm (W) x 150mm (D) x 72mm (H) 7.08" (W) x 5.9" (D) x 2.83" (H)
Weight	TBD
Operating Temperature	0°C~45°C (32°F~113°F) *with airflow 0.9m/s
Storage Temperature	-20°C ~80°C (-4°F~176°F)
Relative Humidity	5%~90%@45°C (non-condensing)
Vibration	Operating: 3Grms / 5~500Hz
Shock	Operating : 20G / 11ms Non-operating : 40G / 11ms
Certification	CE/LVD/FCC Class-B

Ordering Information

ASB200-838-N50M`	Fanless chassis with IB838-N50 w/ Intel® Atom N50, 4x COM, 1x DDR5 memory slot, 1x 2.5" SSD slot, desktop stand & mounting bracket, w/o memory/ SSD/ 90W power adaptor and VESA mount bracket
ASB200-838-i3M	Fanless chassis with IB838-i3 w/ Intel® Atom i3-N305, 4x COM, 1x DDR5 memory slot, 1x 2.5" SSD slot, desktop stand & mounting bracket, w/o memory/ SSD/ 90W power adaptor and VESA mount bracket

Remarks: 1. Specifications are subject to change without prior notice. 2. ODM/OEM is available. 3. For user's manual & datasheet download, visit www.ibase.com.tw.

ASB210-953

SBC System

Slim System with IBASE IB953 3.5" Single Board Computer

Rear I/O

Features

- Slim System with IBASE IB953 3.5" Single Board Computer (TDP-up to 28W)
- Onboard 11th Gen Intel® Core™ U-Series Processor
- Supports 3x M.2 sockets (B-Key/E-Key and M-Key)
- 12V (-10%) ~ 24V (+10%) DC-in power input
- 2x DDR4-3200 SO-DIMM, Max. 64GB
- 3x USB 3.1, 1x USB 2.0, 2x Intel® GbE, 1x COM
- External GPIO, 2x DisplayPort, TPM (2.0)
- Optional VESA mount bracket

Specifications

System Mainboard	IB953AF-i7/ IB953AF-i5/ IB953EF-i3
CPU Type	Intel® Core™ i7-1185G7E Processor Intel® Core™ i5-1145G7E Processor Intel® Core™ i3-1115G4E Processor
System Speed	Up to 4.4GHz
Memory	2x DDR4-3200 SO-DIMM, Max. 64GB
Front Panel External I/O	3x USB 3.1 1x USB 2.0 2x DisplayPort 1x DB9 for COM#1 (RS232/422/485) 2x Gigabit LAN
Rear Panel External I/O	1x Power button 1x Digital I/O (4-in/4-out) 2x Antenna holes 1x HDD LED 1x 3-pin DC-in terminal block for 12V (-10%) ~ 24V (+10%)
Expansion Slots	2x M.2 sockets (B-Key/ E-Key)
Storage	1x M.2 M-key 2280, Supports NVMe, PCI-E(4x) only
Construction	Aluminum & steel 1x System fan
Chassis Color	Black
Mounting Type	Desktop or wall mount (wall mount kit included) Optional VESA mount kit
Dimensions	180mm (W) x 150mm (D) x 72mm (H) 7.08" (W) x 5.9" (D) x 2.83" (H)
Weight	1.5kg
Operating Temperature	0°C~45°C (32°F~113°F) *with airflow 0.9m/s
Storage Temperature	-20°C ~80°C (-4°F~176°F)
Relative Humidity	5%~90%@45°C (non-condensing)
Vibration	Operating: 3Grms / 5~500Hz
Shock	Operating : 20G / 11ms Non-operating : 40G / 11ms
Certification	CE/LVD/FCC Class-B

Ordering Information

ASB210-953-i7M	Chassis with IB953AF-i7, Intel® i7-1185G7E CPU (TDP-up to 28W), w/ system fan, 1x COM, 2x DDR4 memory slot, 1x 2.5" SSD slot, desktop stand & mounting bracket, w/o memory/ SSD/ 90W power adaptor and VESA mount bracket
ASB210-953-i5M	Chassis with IB953AF-i5, Intel® i5-1145G7E CPU (TDP-up to 28W), w/ system fan, 1x COM, 2x DDR4 memory slot, 1x 2.5" SSD slot, desktop stand & mounting bracket, w/o memory/ SSD/ 90W power adaptor and VESA mount bracket
ASB210-953-i3M	Chassis with IB953EF-i3, Intel® i3-1115G4E CPU (TDP-up to 28W), w/ system fan, 1x COM, 2x DDR4 memory slot, 1x 2.5" SSD slot, desktop stand & mounting bracket, w/o memory/ SSD/ 90W power adaptor and VESA mount bracket
90W power adaptor (optional)	90W (24V@3.75A) power adaptor, bare wire type compatible with IEC62368-1/EN62368-1 [PN: A005PS090W0100700P]
Optional Accessories	VESA mount kit [PN: SC2ASB2----0A1200R] WiFi antenna kit [PN: A024MDWiFi0042400P (Intel® 9260) + SC2WiFi----A10M00R (WiFi Kit)]

Dimensions and Drawing

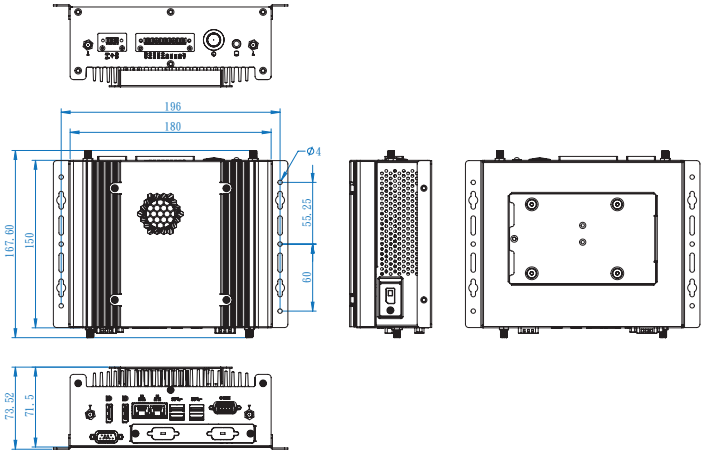

ASB210-961

SBC System

Slim System with IBASE IB961 3.5" Single Board Computer

NEW

Features

- Slim system with IBASE IB961 3.5" Single Board Computer (TDP 28W)
- Onboard 13th Gen Intel® Core™ RPL-P Series Processor
- Supports 3x M.2 sockets (B-Key/ E-Key and M-Key)
- 12V(-10%) ~ 24V(+10%) DC-in power input
- 1x DDR5-4800 SO-DIMM, Max.32GB
- 2x USB 3.2, 1x USB 3.0, 1x USB 2.0, 2x Intel® 2.5G LAN
- 1x COM port, External GPIO
- 2x DisplayPort, fTPM
- Optional VESA mount bracket

Specifications

System Mainboard	IB961VF-I7P/ IB961AF-I5P/ IB961F-I3P
CPU Type	Intel® Core™ i7-1370PE Processor Intel® Core™ i5-1340PE Processor Intel® Core™ i3-1320PE Processor
System Speed	Up to 4.8GHz
Memory	1x DDR5-4800 SO-DIMM, Max.32GB
Front Panel External I/O	2x USB 3.2 1x USB 3.0 1x USB 2.0 2x DisplayPort 1x DB9 for COM#1 (RS232/422/485) 2x 2.5G LAN
Rear Panel External I/O	1x Power button 1x Digital I/O (4-in/4-out) 2x Antenna holes 1x HDD LED 1x 3-pin DC-in terminal block for 12V(-10%) ~ 24V(+10%)
Expansion Slots	3x M.2 sockets (B-Key/ E-Key and M-Key)
Storage	1x M.2 M-key 2280, Supports NVMe, PCI-E(4x) only
Construction	Aluminum & steel
Chassis Color	Black
Mounting Type	Desktop or wall mount (wall mount kit included) Optional VESA mount kit
Dimensions	180mm (W) x 150mm (D) x 72mm (H) 7.08" (W) x 5.9" (D) x 2.83" (H)
Weight	TBD
Operating Temperature	0°C~45°C (32°F~113°F) *with airflow 0.9m/s
Storage Temperature	-20°C ~80°C (-4°F~176°F)
Relative Humidity	5%~90%@45°C (non-condensing)
Vibration	Operating: 3Grms / 5~500Hz
Shock	Operating : 20G / 11ms Non-operating : 40G / 11ms
Certification	CE/LVD/FCC Class-B

Ordering Information

ASB210-961-i7PM	chassis with IB961VF-i7P, Intel® i7-1370PE CPU, 1x COM, 1x DDR5 memory slot, 1x 2.5" SSD slot, desktop stand & mounting bracket, w/o memory/ SSD/ 90W power adaptor and VESA mount bracket
ASB210-961-i5PM	chassis with IB961AF-i5P, Intel® i5-1340PE CPU, 1x COM, 1x DDR5 memory slot, 1x 2.5" SSD slot, desktop stand & mounting bracket, w/o memory/ SSD/ 90W power adaptor and VESA mount bracket
ASB210-961-i3PM	chassis with IB953F-i3P, Intel® i3-1320PE CPU, 1x COM, 1x DDR5 memory slot, 1x 2.5" SSD slot, desktop stand & mounting bracket, w/o memory/ SSD/ 90W power adaptor and VESA mount bracket
90W power adaptor (optional)	90W (24V@3.75A) power adaptor, bare wire type compatible with IEC62368-1/EN62368-1 [PN: A005PS090W0100700P]
Optional Accessories	VESA mount kit [PN: SC2ASB2----0A1200R] Wifi antenna kit [PN: A024MDWIFI0042400P (Intel® 9260) + SC2WIFI----A10M00R (WiFi Kit)]

Remarks: 1. Specifications are subject to change without prior notice. 2. ODM/OEM is available. 3. For user's manual & datasheet download, visit www.ibase.com.tw.

CSB200-818

SBC Fanless System

Fanless System with IBASE IB818 3.5" Single Board Computer

Rear I/O

Features

- Fanless system with IBASE IB818 3.5" Single Board Computer
- Supports Intel® Atom® Processors E3940/ E3930 & Pentium® N4200/ Celeron® N3350 Series
- Wide-range operating temperature from -30°C to 65°C
- 12V(-10%) ~ 24V(+10%) DC wide-range power input
- Wall mount kit included

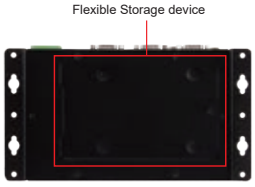

Specifications

System Mainboard	IB818 (F-1 Stepping)
CPU Type	Intel® Atom® Processors E3940/ E3930 & Pentium® N4200/ Celeron® N3350 Series
System Speed	Up to 2.5GHz
Memory	1x 4GB DDR3L-1866 SO-DIMM, Max. 8GB
Front Panel External I/O	1x Power LED 1x HDD LED 1x Power button 1x Reset button 2x USB 2.0 ports 1x Line-out, 1x Mic-in
Rear Panel External I/O	4x USB 3.0 port 1x HDMI 1x RS232/422/485 port for COM#1 3x RS232 ports for COM#2/COM#3/ COM#4 2x RJ45 Gigabit Ethernet port 1x 3-pin DC-in terminal block for 12V(-10%)~24V(+10%)
Expansion Slots	1x Full-size Mini PCI-E socket (USB 2.0 + SATA) 1x Half-size Mini PCI-E socket (USB 2.0)
Storage	1x 2.5" HDD or SSD (removable)
Construction	Aluminum & steel
Chassis Color	Black
Mounting Type	Desktop or wall mount (wall mount kit included)
Dimensions	172mm (W) x 111.6mm (D) x 53mm (H) 6.77" (W) x 4.39" (D) x 2.09" (H)
Weight	1.1kg
Operating Temperature	For E3940 CPU:-30°C~65°C (22°F~149°F) (With SSD) *With air flow For N-Series CPU:-10°C ~45°C(14°C~113°C) (With HDD) *With air flow
Storage Temperature	-40°C ~ 85°C (-40°F~185°F)
Relative Humidity	5~90% @ 45°C, (non-condensing)
Vibration	Operating: 1.0 grms / 5~500Hz / random operation (with IEC 60068-2-64) Non-Operating: 2.0 grms / 5~500Hz / random operation (with IEC 60068-2-64)
Shock	Operating : 20G / 11ms Non-operating : 40G / 11ms)
Certification	CE / LVD / FCC Class-B

Ordering Information

CSB200-818-I40	Fanless system w/ Intel® Atom® E3940, 4x COM, 1x 4GB DDR3L industrial-grade memory, 1x 2.5" 64GB MLC industrial-grade SSD, w/o 60W power adaptor
CSB200-818-I30	Fanless system w/ Intel® Atom® E3930, 4x COM, 1x 4GB DDR3L industrial-grade memory, 1x 2.5" 64GB MLC industrial-grade SSD, w/o 60W power adaptor
CSB200-818-420	Fanless system w/ Intel® Pentium® N4200, 4x COM, 1x 4GB DDR3L memory, 1x 2.5" 500 GB SATA HDD, w/o 60W power adaptor
CSB200-818-335	Fanless system w/ Intel® Celeron® N3350, 4x COM, 1x 4GB DDR3L memory, 1x 2.5" 500GB SATA HDD, w/o 60W power adaptor
60W power adaptor	60W (12V@5A) power adaptor, DC-jack or bare wire type Compatible with IEC62368-1/EN62368-1

Dimensions and Drawing

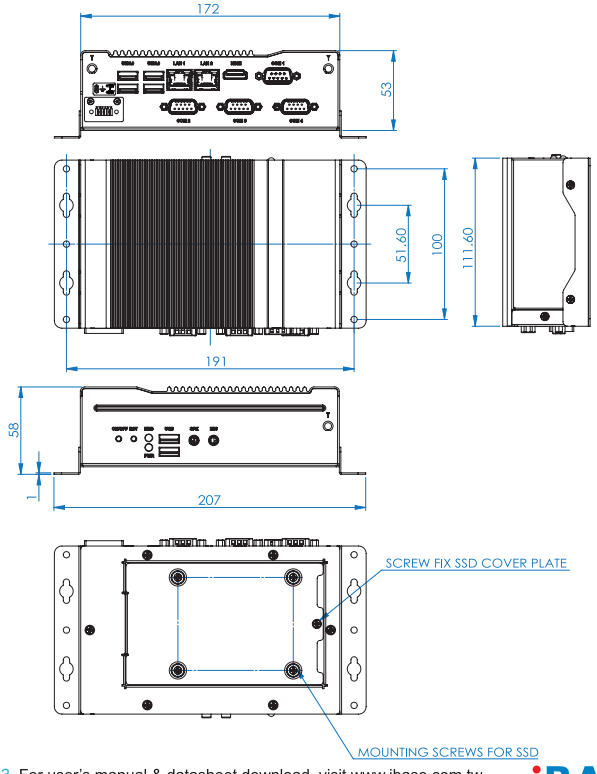

Remarks: 1. Specifications are subject to change without prior notice. 2. ODM/OEM is available. 3. For user's manual & datasheet download, visit www.ibase.com.tw.

CSB200-822

SBC Fanless System

Fanless System with IBASE IB822 3.5'' Single Board Computer

Features

- Fanless system with IBASE IB822 3.5'' Single Board Computer
- Intel® Pentium® Silver Processor J5040
- DC-Jack type or Terminal block type (by option)
- Supports 1x 2.5'' SATA HDD or SSD (removable)
- Wall mount kit included

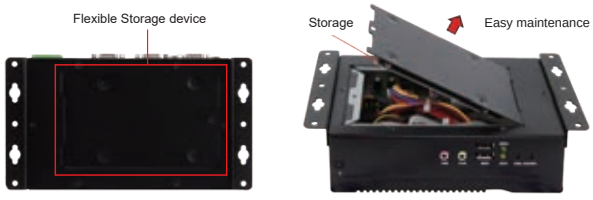

Specifications

System Mainboard	IB822
CPU Type	Intel® Pentium® Silver Processor J5040
System Speed	Up to 2.8GHz
Memory	1x 4GB DDR4 SO-DIMM, Max. 8GB
Front Panel External I/O	1x Power LED 1x HDD LED 1x Power button 1x Reset button 2x USB 2.0 ports 1x Line-out 1x Mic-in 1x Antenna reserved
Rear Panel External I/O	4x USB 3.0 port 1x RS232/422/485 for COM#1 3x RS232 for COM#2~4 1x HDMI 1x DisplayPort 2x RJ-45 Gigabit Ethernet port 2x Antenna reserved 1x DC jack with lock or Terminal block 12V(±10%) DC-in
Expansion Slots	1x M.2 (B-key, type: 2242) 1x M.2 (E-key, type: 2230)
Storage	1x 2.5" SATA HDD or SSD (removable)
Construction	Aluminum & Steel
Chassis Color	Black
Mounting Type	Desktop or wall mount (Wall mount kit included)
Dimensions	172mm (W) x 111.6mm (D) x 53mm (H) 6.77" (W) x 4.37" (D) x 2.08" (H)
Weight	1.1kgs
Operating Temperature	0°C~45°C (32°F~113°F) (HDD) *With air flow 0°C~50°C (32°F~122°F) (SSD) *With air flow
Storage Temperature	-40°C~85°C (-40°F~185°F)
Relative Humidity	5%~90%@45°C (non-condensing)
Vibration	Operatiing: 1.0 grms / 5~500Hz / random operation (with IEC 60068-2-64) Non-Operating: 2.0 grms / 5~500Hz / random operation (with IEC 60068-2-64)
Shock	Operating : 20G / 11ms Non-operating : 40G / 11ms
Certification	CE/ FCC Class-B / LVD

Ordering Information

CSB200-822-5040S	Fanless system with IB822-J5040 w/ Intel® Pentium® J5040, 4x COM, 1x 4GB DDR4 memory, 1x 2.5" 500GB HDD, desktop stand & mounting brackets, w/o 60W power adaptor, Terminal block power input
CSB200-822-5040S-DC	Fanless system with IB822-J5040 w/ Intel® Pentium® J5040, 4x COM, 1x 4GB DDR4 memory, 1x 2.5" 500GB HDD, desktop stand & mounting brackets, w/o 60W power adaptor, DC-Jack power input
60W power adaptor (optional)	60W (12V@5A) power adaptor, DC-jack or bare wire type, Compatible with IEC62368-1/EN62368-1

Dimensions and Drawing

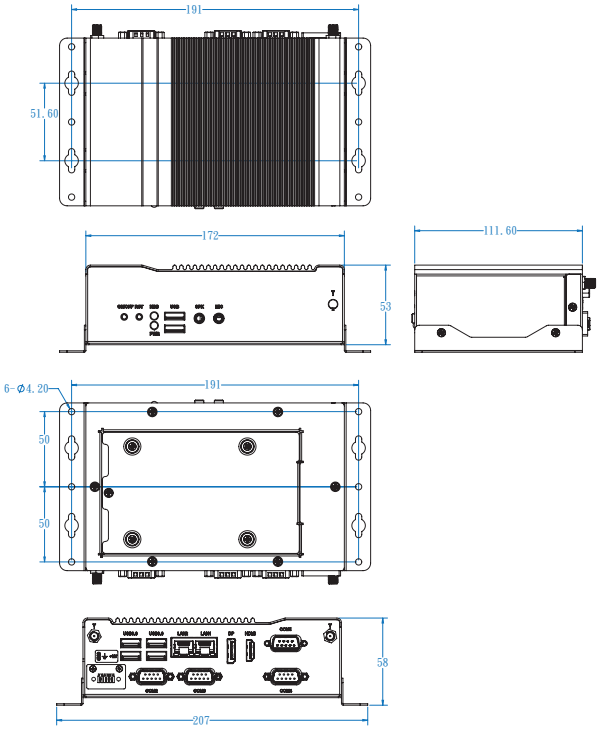

Remarks: 1. Specifications are subject to change without prior notice. 2. ODM/OEM is available. 3. For user's manual & datasheet download, visit www.ibase.com.tw.

CMB100 Series

Expandable System

High Performance Expandable Industrial Computer Powered by 7th/6th Gen Intel® Core DT processors

Features

- Supports 7th/6th Gen Intel® Core™ DT processors (TDP 65W) with specified M/B
- expansion slots : 1x PCI-E(x16), 1x PCI-E(x8), 1x PCI-E(x4)
- 500W 1U Flex ATX power supply [default]
- 2-pin remote boot extension design
- Supports 2x HDMI and GbE ports, USB 3.0 ports
- Four removable 2.5" storage bays (supports RAID 0/1)
- MiniPCI-E and M.2 M-Key (2280)
- TPM, DIO, iAMT, iSMART [optional]

Specifications

System Mainboard	C236 MicroATX motherboards
CPU Type	7th/6th Gen Intel® Core™ DT processors (TDP 65W)
System Speed	Up to 4.2GHz (C236 supports ECC by CPU SKU)
Memory	2x DDR4-2933/2666 U-DIMM, Max. 64GB
Front Panel External I/O	2-pin remote boot extension design Detachable side cover for GFX Card 4x slots Power button 2x HDMI 6x USB 3.0 ports, 4x USB 2.0 (expandable) 2x RJ45 Gigabit Ethernet port 2x RS232/422/485, 2x RS232
Rear Panel External I/O	Pluggable cooling-fan
Expansion Slots	1x PCI-E(x16), 1x PCI-E(x8), 1x PCI-E(x4), 1x M.2 (M-key 2280)
Storage	4x 2.5" SATA (supports RAID 0/1)+Mini PCI-E 1x M.2 (M-key 2280)
Construction	SECC
Chassis Color	Black
Mounting Type	Desktop & wall mount
Dimensions	362.4mm(W) x 350.0mm(D) x 156.0mm(H) 14.26"(W) x 13.77"(D) x 6.14"(H)
Weight	Depends on the configuration of power supply and motherboard related components
Operating Temperature	0°C~45°C (32°F~113°F) (for 65W CPU) @60°C, non-condensing
Storage Temperature	-20°C~80°C (-4°F~176°F), @60°C, non-condensing
Relative Humidity	10~90% @ 60°C, (non-condensing)
Vibration	Non-Operating: 1.0 grms / 5~500Hz / random operation Operatiing:1 grms / 5~500Hz / random operation
Shock	With SSD: Operating 20G, IEC 60068-2-27, half-sine, 11 ms duration With SSD Non-Operating 40G, IEC 60068-2-27, half-sine, 11 ms duration With SSD
Certification	CE FCC Class-A / LVD

Ordering Information

CMB101M	Chassis with MicroATX motherboard w/o CPU, memory, storage, support 7th/6th Gen Intel® i7/i5/i3 / Pentium® / Celeron® QC/DC processors, up to 4.2GHz

Dimensions and Drawing

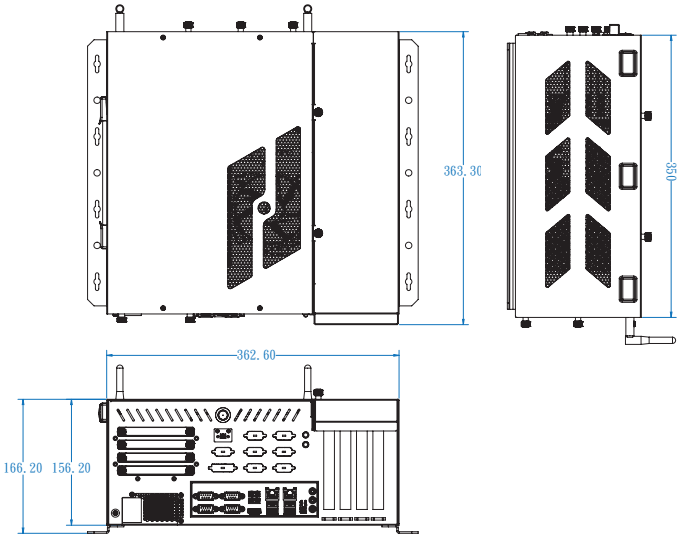

CMB106 Series

Expandable System

High Performance Expandable Industrial Computer Powered by 9th/8th/7th/6th Gen Intel® Core DT processors

Features

- Supports 9th/8th/7th/6th Gen Intel® Core DT processors (TDP 65W) with specified M/B
- Supports discrete GPU cards via reserved expansion slots
- Multiple expansion slots :1x PCI-E(x16), 1x PCI-E(x8), 1x PCI-E(x4)
- 500W 1U Flex ATX power supply [default]
- 2-pin remote boot extension design
- Supports 2x HDMI and GbE ports, USB 3.0 ports
- Four 2.5" storage bays (supports RAID 0/1)
- MiniPCI-E and M.2 M-Key (2280)
- TPM, DIO, iAMT, iSMART [optional]

Specifications

System Mainboard	C236 MicroATX motherboards
CPU Type	9th/8th/7th/6th Gen Intel® Core™ DT processors (TDP 65W)
System Speed	Up to 4.2GHz (C236 supports ECC by CPU SKUs)
Memory	4x DDR4 UIMM, Max. 64GB
Front Panel External I/O	2-pin remote boot extension design Detachable side cover for GFX Card 4x slots Power button 2x HDMI 6x USB 3.0 ports, 4x USB 2.0 (expandable) 2x RJ45 Gigabit Ethernet ports 2x RS232/422/485, 2x RS232
Rear Panel External I/O	Pluggable cooling-fan
Expansion Slots	1x PCI-E(x16), 1x PCI-E(x8), 1x PCI-E(x4) 1x M.2 (M-key 2280)
Storage	4x 2.5" SATA (supports RAID 0/1)+Mini PCI-E 1x M.2 (M-key 2280)
Construction	SECC
Chassis Color	Black
Mounting Type	Desktop & wall mount
Dimensions	325mm(W) x 350mm(D) x 156mm(H) 12.79"(W) x 13.77"(D) x 6.14"(H)
Weight	Depends on the configuration of power supply and motherboard related components
Operating Temperature	0°C~45°C (32°F~113°F) (for 65W CPU) @60°C, non-condensing
Storage Temperature	-20°C~80°C (-4°F~176°F), @60°C, non-condensing
Relative Humidity	10~95%, non-condensing@60 degree-C
Vibration	With SSD: 1Grms, IEC 60068-2-64, random, 5Hz~500Hz
Shock	With SSD: Operating 20G, IEC 60068-2-27, half-sine, 11 ms duration With SSD Non-Operating 40G, IEC 60068-2-27, half-sine, 11 ms duration With SSD
Certification	CE FCC ClassA / LVD

Ordering Information

CMB106M	Chassis with MicroATX 7th/6th motherboard w/o CPU, memory, storage, support Gen Intel® i7/i5/i3 / Pentium® / Celeron® QC/DC processors, up to 4.2GHz

Dimensions and Drawing

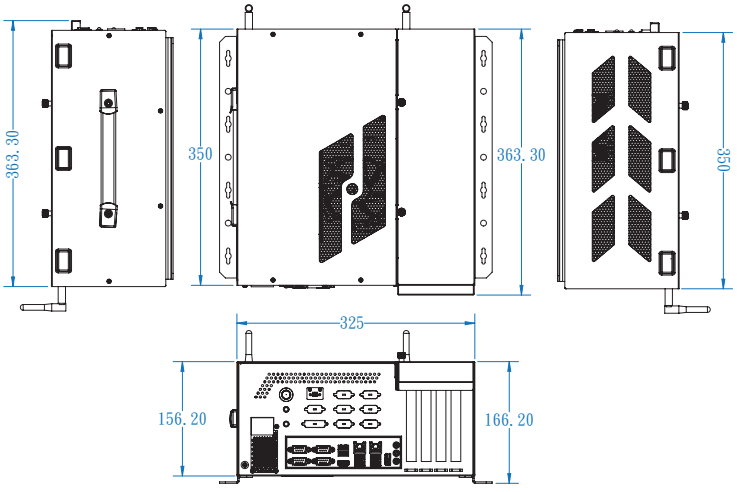

Remarks: 1. Specifications are subject to change without prior notice. 2. ODM/OEM is available. 3. For user's manual & datasheet download, visit www.ibase.com.tw.

CMB108

Expandable System

Compact Expandable Fanless System Powered by
13th/12th Gen Intel® Core™ i9/i7/i5/i3 Desktop Processors

NEW

Features

- Compact fanless system with for IBASE MB998 board
- 13th/12th Gen Intel® Core™ i9/i7/i5/i3 Processors (65W TDP)
  Supports discrete GPU cards via reserved expansion slots
- Front removable drive bay for HDD/SSD
- 4x COM, 6x USB, 2x 2.5G LAN, 1x HDMI, 2x DisplayPort
- Over/Under/Reverse voltage protection
- Supports DIN-rail mount & wall mount
- fTPM

Specifications

System Mainboard	MB998 with Intel® Q670E PCH
CPU Type	13th/12th Gen Intel® Core™ i9/ i7/i5/i3 desktop Processors (65W TDP)
System Speed	Up to 45.0GHz
Memory	2x DDR5-4800/5600 U-DIMM, Max. 64GB
Front Panel External I/O	6x Antenna holes for WLAN/4G/5G module
Rear Panel External I/O	1x HDMI connector 2x DisplayPort connector 1x Audio jack for Line-out 4x USB 3.3 (Gen2) 2x USB3.1 (Gen1) 1x Red HDD LED, 1x green power LED, 2x Error LED by programming 1x 2-pins terminal block connector for remote access 1x Power button 2x RS232/422/485 port for COM#1~COM#2 2x RS232 port for COM#3~ COM#4 2x RJ45 2.5G Ethernet port 1x 3-pin DC-in terminal block for 24V(±10%)
Expansion Slots	1x M.2 2042 E-Key (USB 2.0 & PCI-E) 1x M.2 3052 B-Key (USB 3.0 & PCI-E) 1x M.2 2280 M-Key [NVMe] 1x M.2 2280 M-Key
Storage	1x 2.5" HDD/SSD (external-accessible) 2x M.2 2280 M-Key, Supports NVMe SSD
Construction	Aluminum & steel
Chassis Color	Silver & Gray
Mounting Type	Desktop & wall mount
Dimensions	325mm(W) x 350mm(D) x 156mm(H) 12.79"(W) x 13.77"(D) x 6.14"(H)
Weight	TBD kg
Operating Temperature	0°C~45°C (32°F~113°F) (for 65W CPU) @60°C, non-condensing
Storage Temperature	-20°C~80°C (-4°F~176°F), @60°C, non-condensing
Relative Humidity	10~95%, non-condensing@60 degree-C
Vibration	With SSD: 1Grms, IEC 60068-2-64, random, 5Hz~500Hz
Shock	With SSD: Operating 20G, IEC 60068-2-27, half-sine, 11 ms duration With SSD Non-Operating 40G, IEC 60068-2-27, half-sine, 11 ms duration With SSD
Certification	CE / FCC Class A/ LVD

Ordering Information

CMB108M	Chassis with MicroATX 13th motherboard w/o CPU, memory, storage, support Gen Intel® i7/i5/i3 / Pentium® / Celeron® QC/DC processors, up to 5.0GHz

Embedded Function Cards

Daughter Boards and Function Cards

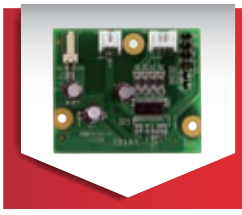

ID107

Features
- 55mm x 47mm
- Amplifier board
- TPA3110D2 on board

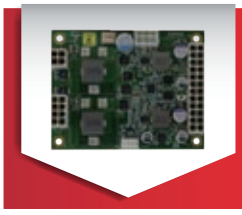

ID600

Features
- 90 mm x 60mm
- +19V ~+24V DC to DC converter
- 300W ATX power board

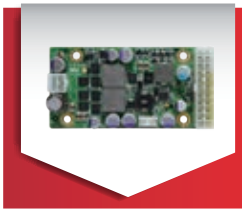

ID452

Features
- 90 mm x 60mm
- +12V ~+24V DC to DC converter
- 120W ATX power board

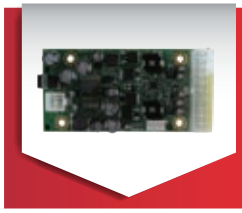

ID450-R

Features
- 90 mm x 60mm
- +12V only DC to DC converter
- 120W ATX power board

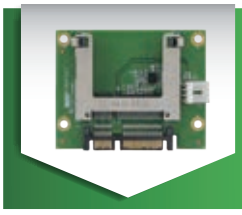

IB-CFAST

Features
- 72.4mm x 57.5mm
- SATA + power connector (CFast socket)

Riser Cards

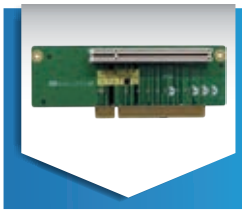

IP115

Features
- 139.7mm x 51.38mm
- 1x PCI interface to PCI

IP116-R

Features
- 139.7mm x 55.34mm
- 1x PCI-E (x16) interface to PCI-E (x16) slot

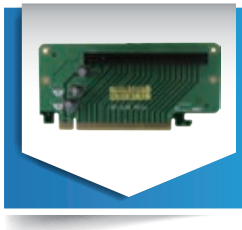

IP118

Features
- 119.63mm x 64.5mm
- 1x PCI-E (x16) interface to PCI-E (x16) slot

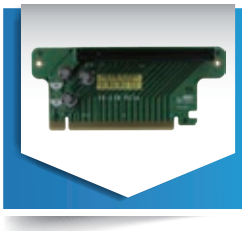

IP119

Features
- 123.96mm x 55.50mm
- 1x PCI-E (x16) interface to PCI-E (x16) slot

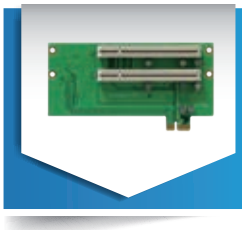

IP155

Features
- 139.7mm x 75.74mm
- ASM1083 chipset
- 1x PCI interface to 2x PCI slot

Remarks: 1. Specifications are subject to change without prior notice. 2. ODM/OEM is available. 3. For user's manual & datasheet download, visit www.ibase.com.tw.

Embedded Function Cards

Riser Cards

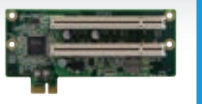

IP245

Features

- 130mm x 60mm
- IT8893E chipset
- PCI-E (x1) interface to 2x PCI slot

IP246

Features

- 30mm x 60mm
- IT8893E & PEX8603 chipset
- 1x PCI-E (x1) to PCI + 1x PCI-E (x1) slot

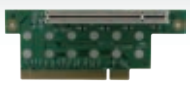

IP271

Features

- 129.97mm x 51.25mm
- 1x PCI interface to PCI slot

IP340

Features

- 110mm x 62.5mm
- 2x PCI interface to PCI slot

IP403

Features

- 144.6 mm x 68.3mm
- PCI-E (x16) interface to 2x Mini PCI-E

IP404

Features

- 139.7mm x 75.74mm
- PCI-E (x16) interface to 2x PCI-E (x8)

IP405

Features

- 139.25mm x 62.78mm
- PCI-E (x16) interface to 2x PCI-E (x8)

IP406

Features

- 123mm x 50.77mm
- 1x PCI-E (x1) interface to Mini PCI-E + 1x SIM card slot

Mini PCI-E Cards with Expansion

IBD182

Features:
- PCI-E to 2x RS232
- XR17V352 chipset
- 50.95mm x 30mm

IBD183

Features:
- USB to UART, 1x RS232+1x RS422/485
- XR21V1412 chipset
- 50.95mm x 30mm

IBD184

Features:
- PCI-E to 4x RS232
- XR17V354 chipset
- 50.95mm x 30mm

IBD185

Features:
- USB to GPIO
- 16-in /16-out
- STM32F103V8 chipset
- 50.95mm x 30mm

IBD186

Features:
- PCI-E to 2x RS232 w/ isolation
- XR17V352 & 2x LTM2882CY-3 chipset
- 50.95mm x 30mm

IBD188

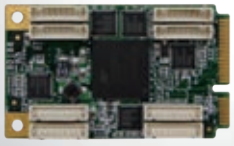

Features:
- PCI-E to 8x RS232
- XR17V358 chipset
- 50.95mm x 30mm

IBD190

Features:
- PCI-E to 1x GbE LAN
- 1x Intel® I211-AT chipset
- 50.95mm x 30mm

IBD192

Features:
- PCI-E to 2x GbE LAN
- 2x Intel® I211-AT or 2x Intel® I210-AT chipset
- 50.95mm x 30mm

IBD193

Features:
- PCI-E to MRAM storage
- 1x MR2A16ACYS35 chipset
- 50.95mm x 30mm

IBD194

Features:
- USB to 2nd VGA Display
- Resolution up to 1920x 1080 (Max.)
- DisplayLink DL-165 chipset
- 50.95 mm x 30 mm

IBD195

Features:
- PCI-E to 2x CAN Bus
- Dual channel isolation
- 50.95mm x 30mm

IBD196

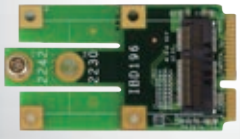

Features:
- Mini-PCI-E to M.2 E key
- 54.5mm x 30mm

Remarks: 1. Specifications are subject to change without prior notice. 2. ODM/OEM is available. 3. For user's manual & datasheet download, visit www.ibase.com.tw.

MEMO

iBASE Industry Leader In Embedded Computing

HEADQUARTERS

IBASE Technology Inc.
11F, No. 3-1, Yuan Qu St., Nankang,
Taipei 115, Taiwan, R.O.C.

廣積科技股份有限公司
台北市115南港區園區街3-1號11樓G棟
Tel: +886-2-2655-7588
Fax: +886-2-2655-7388
sales@ibase.com.tw
www.ibase.com.tw

DOWNLOAD
INTELLIGENT SYSTEMS
CATALOG

WORLDWIDE OFFICES

European Headquarters
IBASE Europe (TMC Technology)
12 Wedgwood Court Stevenage,
Herts, SG1 4QR, United Kingdom
Tel: +44-1438-846090
Fax: +44-1438-842308
sales@ibase-europe.com
www.ibase-europe.com

Italy
IBASE Italy S.r.l.
Via Sant Antonio 1/A
28845 Domodossola, Verbania, Italy
Tel: +39-0324-47501
Fax: +39-0324-47501
info.italy@ibase-europe.com
www.ibase-europe.com

USA
IBASE Technology (USA), Inc.
1050 Stewart Drive,Sunnyvale,
CA 94085, U.S.A.
Tel: +1-408-992-0888
Fax: +1-408-992-0808
sales@ibase-usa.com
www.ibase-usa.com

Singapore
IBASE Singapore Pte Ltd.
10, Ubi Crescent #07-60,
Ubi Techpark (Lobby D),
Singapore 408564
Tel: +65-6842-5112
Fax: +65-6842-5113
sales@ibase-singapore.com
www.ibase-singapore.com

China
IBASE (Shanghai) Technology Inc.
2F, Building 3, No. 2005, HongMei
Road, 201103 Shanghai, China
上海广佳信息技术有限公司
中国上海市虹梅路2005号3号楼2层
邮编：201103
Tel: +86-021-6090-5088
Fax: +86-021-6090-6388
sales@ibase.com.tw
www.ibase.com.tw

China
IBASE (Shanghai) Technology Inc.
Beijing Office
Room 1622, GuoFengMeiTang
Building 5, No. 106, KeXing West Road,
Changping District, 100029 Beijing, China
上海广佳信息技术有限公司-北京办事处
中国北京市昌平区回龙观科星西路106号
国风美唐5号商务楼1622室
邮编：100029
Tel: +86-133-113-80499
sales@ibase.com.tw
www.ibase.com.tw

Japan
IBASE Japan Corp.
3F Bansei Muromachi Bldg., 4-3-12
Nihonbashi Muromachi, Chu-O ku,
Tokyo, Japan
IBASE ジャパン株式会社
東京都中央区日本橋室町4-3-12
バンセイ室町ビル3F
Tel: +81-3-6262-1303
Fax: +81-3-6262-6106
sales@ibase-japan.com
www.ibase-japan.com

India
IBASE India
sales@ibase-india.com
www.ibase-india.com